SIEMENS

HIFI-SYSTEM RS330/340

SERVICE MANUAL
TABLE OF CONTENTS

Page

Sicherheitsbestimmungen / Safety Standard Compliance ____ 2
Lasersicherheit / Laser Safety ____ 3

RA330G6
Block Diagram ____ 4
Schematic Diagram ____ 5
Exploded View ____ 7
Adjustment ____ 10
Wiring Diagram ____ 12
P.C.B. Layout ____ 13
I.C. Block Diagram ____ 14

RC330G6
General Technical Data ____ 19
Block Diagram ____ 20
Schematic Diagram ____ 21
P.C.B. Layout ____ 23
Exploded View ____ 26
Deck Alignment ____ 29
Wiring Diagram ____ 32
I.C. Block Diagram ____ 33

RH330T6
General Technical Data ____ 39
Block Diagram ____ 40
Schematic Diagram ____ 41
P.C.B. Layout ____ 43
Exploded View ____ 45
Wiring Diagram ____ 46
Tuner Alignment ____ 47
I.C. Block Diagram ____ 49

RV330RG
General Technical Data ____ 55
Block Diagram ____ 56
Schematic Diagram ____ 57
P.C.B. Layout ____ 59
Exploded View ____ 62
Wiring Diagram ____ 63
I.C. Block Diagram ____ 64

RV340R6
General Technical Data ____ 69
Block Diagram ____ 70
Schematic Diagram ____ 71
P.C.B. Layout ____ 73
Exploded View ____ 76
Wiring Diagram ____ 77
I.C. Block Diagram ____ 78

Ausgabe: 9346
Issue

Änderungen vorbehalten
Subject to modifications

Ident-Nr. 53 55 52

(D) Sicherheitsbestimmungen

Nach Servicearbeiten ist bei Geräten der Schutzklasse II die Messung des Isolationswiderstandes und des Ableitstromes bei eingeschaltetem Gerät nach **VDE 0701 / Teil 200** bzw. der am Aufstellort geltenden Vorschrift, durchzuführen!
Dieses Gerät entspricht der Schutzklasse II, erkennbar durch das Symbol ⧈ .

- **Messen des Isolationswiderstandes nach VDE 0701.**
  Isolationsmesser (U_{Test} = 500 V-) gleichzeitig an beiden Netzpolen und zwischen allen Gehäuse- oder Funktionsteilen (Antenne, Buchsen, Tasten, Zierteilen, Schrauben, usw.) aus Metall oder Metallegierungen anlegen. Fehlerfrei ist das Gerät bei einem:
  $R_{Isol} \geq 2\ M\Omega$ bei U_{Test} = 500 V-
  Meßzeit: ≥ 1 s (Fig. 1)

Anmerkung: Bei Geräten der Schutzklasse II kann durch Entladungswiderstände der Meßwert des Isolationswiderstandes konstruktionsbedingt < 2 MΩ sein. In diesen Fällen ist die Ableitstrommessung maßgebend.

- **Messen des Ableitstromes nach VDE 0701.**
  Ableitstrommesser (U_{Test} =220 V≈) gleichzeitig an beiden Netzpolen und zwischen allen Gehäuse- oder Funktionsteilen (Antenne, Buchsen, Tasten, Zierteilen, Schrauben, usw.) aus Metall oder Metallegierungen anlegen. Fehlerfrei ist das Gerät bei einem:
  $I_{Ableit} \leq 1$ mA bei U_{Test} = 220V ≈ / Meßzeit ≥ 1 s (Fig. 2)
- Wir empfehlen die Messungen mit dem **METRATESTER 3** durchzuführen. (Meßgerät zur Prüfung elektrischer Geräte nach VDE 0701).
  Metrawatt GmbH
  Geschäftsstelle Bayern
  Triebstr. 44
  D 8000 München 50
- Ist die Sicherheit des Gerätes nicht gegeben, weil
  - eine Instandsetzung unmöglich ist,
  - oder der Wunsch des Benützers besteht, die Instandsetzung nicht durchführen zu lassen, so muß dem Betreiber die vom Gerät ausgehende Gefahr schriftlich mitgeteilt werden.

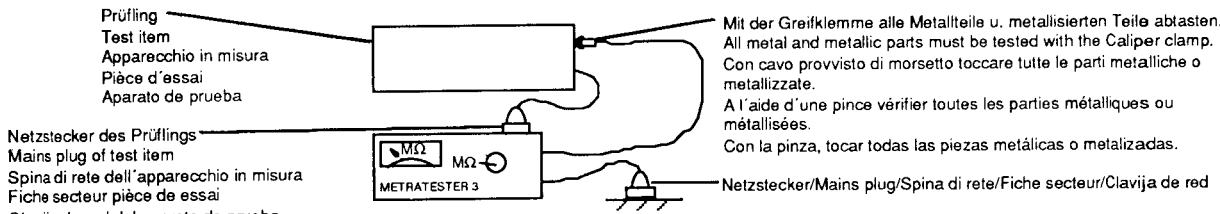

Fig. 1

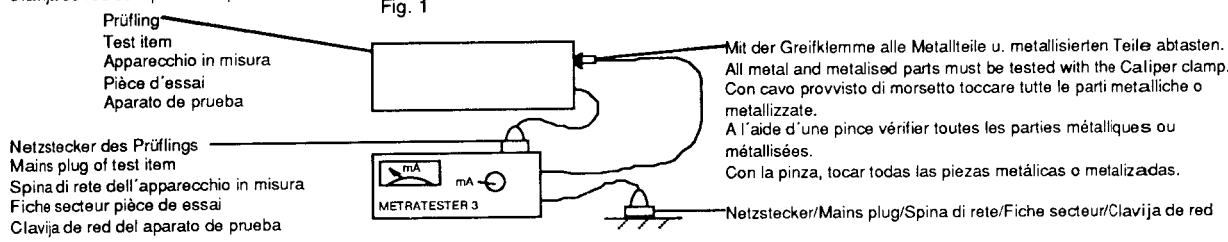

Fig. 2

Empfehlungen für den Servicefall

- Nur Original - Ersatzteile verwenden.
  Bei Bauteilen oder Baugruppen mit der Sicherheitskennzeichnung ⚠ sind Original - Ersatzteile zwingend notwendig.
- Auf Sollwert der Sicherungen achten.
  Zur Sicherheit beitragende Teile des Gerätes dürfen weder beschädigt noch offensichtlich ungeeignet sein.
- Dies gilt besonders für Isolierungen und Isolierteile.
- Netzleitungen und Anschlußleitungen sind auf äußere Mängel vor dem Anschluß zu prüfen. Isolation prüfen!
- Die Funktionssicherheit der Zugentlastung und von Biegeschutz-Tüllen ist zu prüfen.
- Thermisch belastete Lötstellen absaugen und neu löten.
- Belüftungen frei lassen.

(GB) Safety Standard Compliance

After service work on a product conforming to the Safety Class II, the insulating resistance and the leakage current with the product switch on must be checked according to VDE 0701 or to the specification valid at the installation location!
This product conforms to the Safety Class II, as identified by the symbol ⧈ .

- **Measurement of the Insulation Resistance to VDE 0701,**
  Connect an Insulation Meter (U_{Test} = 500 V-) to both mains poles simultaneously and between all cabinet or functional parts (antenna, sockets, buttons, decorative parts, etc.) made from metal or metal alloy. The product is fault free if:
  $R_{Isol} \geq 2\ M\Omega$ at U_{Test} = 500 V-
  Measuring time: ≥ 1s, (Fig. 1)

Comment: On product conforming to the Safety class II the Insulation Resistance can be < 2 MOhm, dependent contructively on discharge resistors. In this cases, the check of the leakage current is significant.

- **Measurement of the Leakage Current to VDE 0701.**
  Connect the Leakage Current Meter (U_{Test} = 220 V≈) to both mains poles simultaneously and between all cabinet or functional parts (antenna, sockets, buttons, screws, etc.) mad from metal or metal alloy. The product is fault free if:
  $I_{Leak} \leq 1$ mA at U_{Test} = 220 V ≈
  Measuring time: ≥ 1 s, (Fig. 2)
- We recommend that the measurements are carried out using the **METRATESTER 3**. (Test equipment for checking electrical products to VDE 0701).
  Metrawatt GmbH
  Geschäftsstelle Bayern
  Triebstr. 44
  D 8000 München 50
- If the safety of the product is not proved, because
  - a repair and restoration is impossible
  - or the request of the user is that the restoration is not to be carried out, the operator of the product must be warned of the danger by a written warning.

Recommendation for service repairs

- Use only original spare parts.
  With components or assemblies accompanied with the Safety Symbol only original-spare parts are strictly to be used.
- Use only original fuse value.
- Safety compliance, parts of the product must not be visually damaged or unsuitable. This is valid especially for insulators and insulating parts.
- Mains leads and connecting leads should be checked for external damage before connection. Check the insulation!
- The functional safety of the tension relief and bending protection bushes are to be checked:
- Thermally loaded solder pads are to be suck off and re-soldered. Ensure that the ventilation slots are not obstructed.

1. Umgang mit der Laserabtasteinheit

Da die Laserdiode in der Abtasteinheit bereits durch geringe statische Spannungen zerstört wird, muß beim Wechsel der Abtasteinheit besonders vorsichtig vorgegangen werden.

Beim Reinigen der beweglichen Linie der Abtasteinheit mittels Druckluft oder eines mit Isopropylalkohol getränkten Wattestäbchen ist ebenfalls Vorsicht geboten.

1. Handling the pick-up

As the laserdiode of pick-up already breaks down by low static electricity, there fore take care if remove the pick up.

Take care the cleaning of oscillating pick-up lense with pressed air or isopropyl alcohol mountened cotton swab.

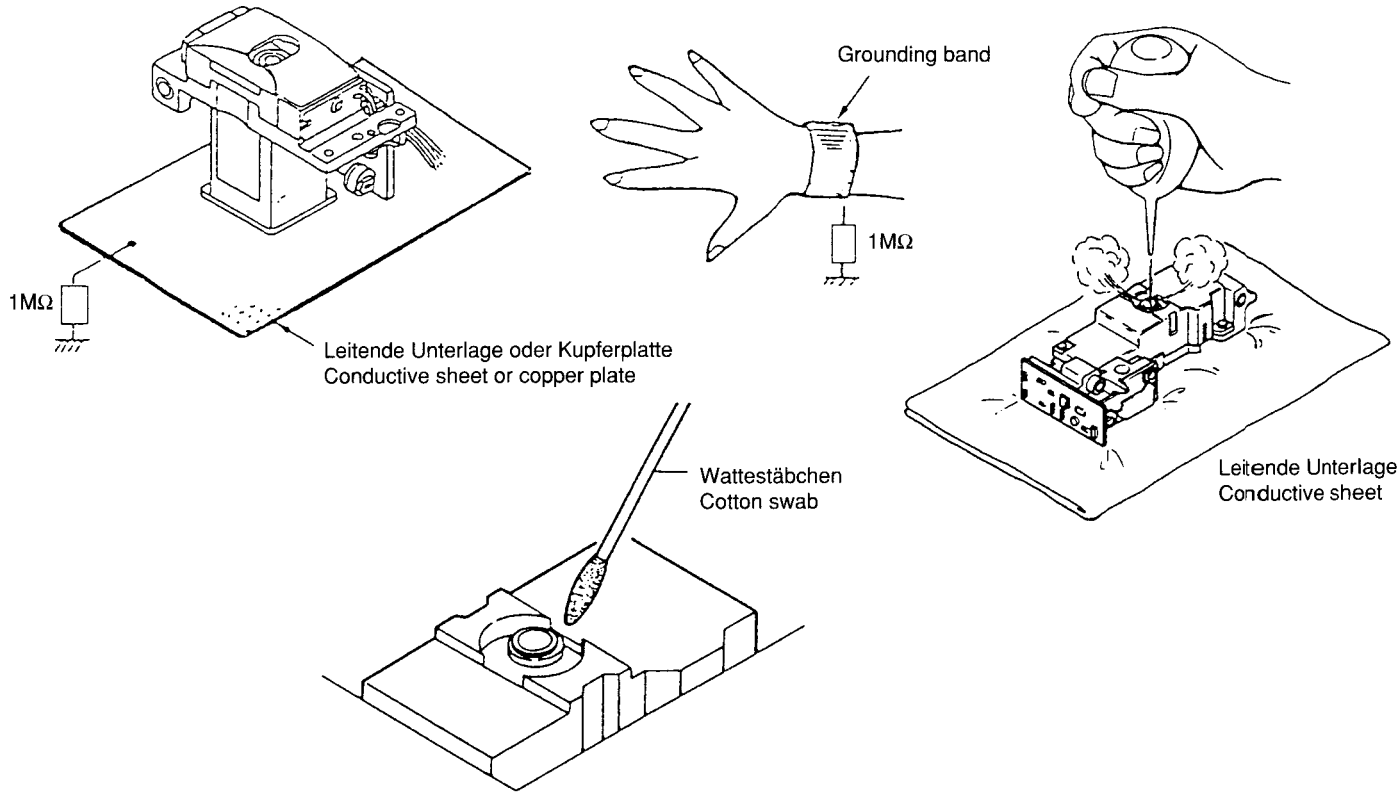

Laserschutzbrillen

Je nach Sichtverhältnissen bietet die Fa. LASER VISION Laserschutzbrillen nach DIN für Normalsichtige und Brillenträger an.

Adresse: LASER VISION
Vertrieb von Laserschutzprodukten GmbH
Berliner Straße 9B
8550 Forchheim
Telefon: 0 91 91/20 61
Telefax: 0 91 91/6 69 13

Empfehlung von Laserschutzbrillen der Fa. LASER VISION:

Bügelbrille für Normalsichtige
Art.-No.: 00.268.00
Brillentyp: L–02
Filtertyp: 68
Schutzstufe: L4A

Brillenträgerausführung
Art.-Nr.: 00.368.00
Brillentyp: L–03
Filtertyp: 68
Schutzstufe: L4A

Die Tageslichttransmission beider Brillen liegt bei 52% und die Filterfarbe ist grün.

Laser goggles

According as eye side the firm LASER VISION sells DIN laser goggles for good eyes and defectively sighted eyes (with glasses).

Address: LASER VISION
Vertrieb von Laserschutzprodukten GmbH
Berliner Straße 9B
8550 Forchheim
Telefon: 0 91 91/20 61
Telefax: 0 91 91/6 69 13

Recommenduction of LASER VISION-laser goggles:

Goggles for good eyes
Article-no.: 00.268.00
Model type: L–02
Filter type: 68
Protection level: L4A

Goggles for wearer of glasses
Article no.: 00.368.00
Model type: L–03
Filter type: 68
Protection level: L4A

The daylight transmission is 52% and the filter colour is green.

BLOCK DIAGRAM (RA330G6)

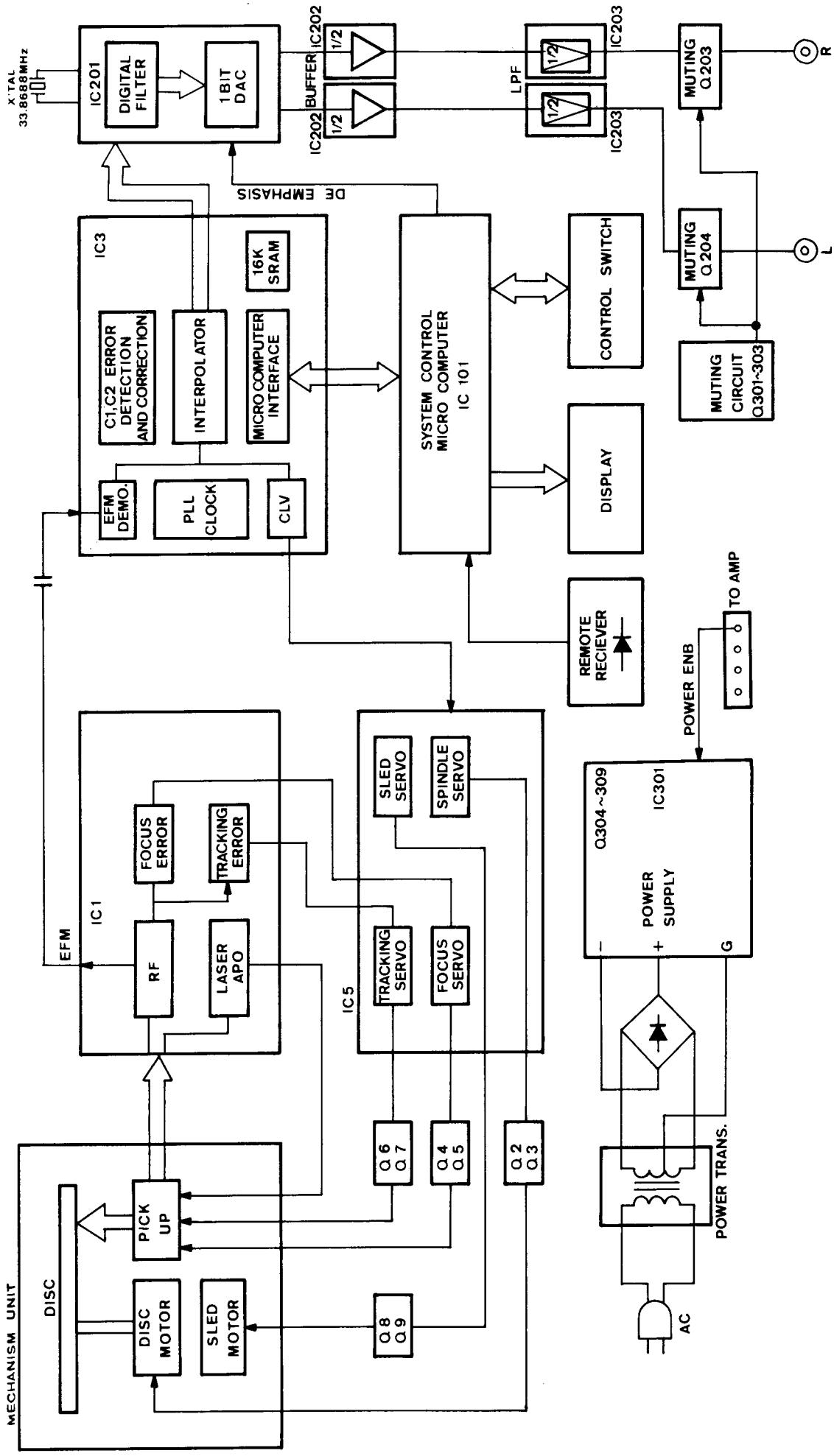

SCHEMATIC DIAGRAM (RA330G6)

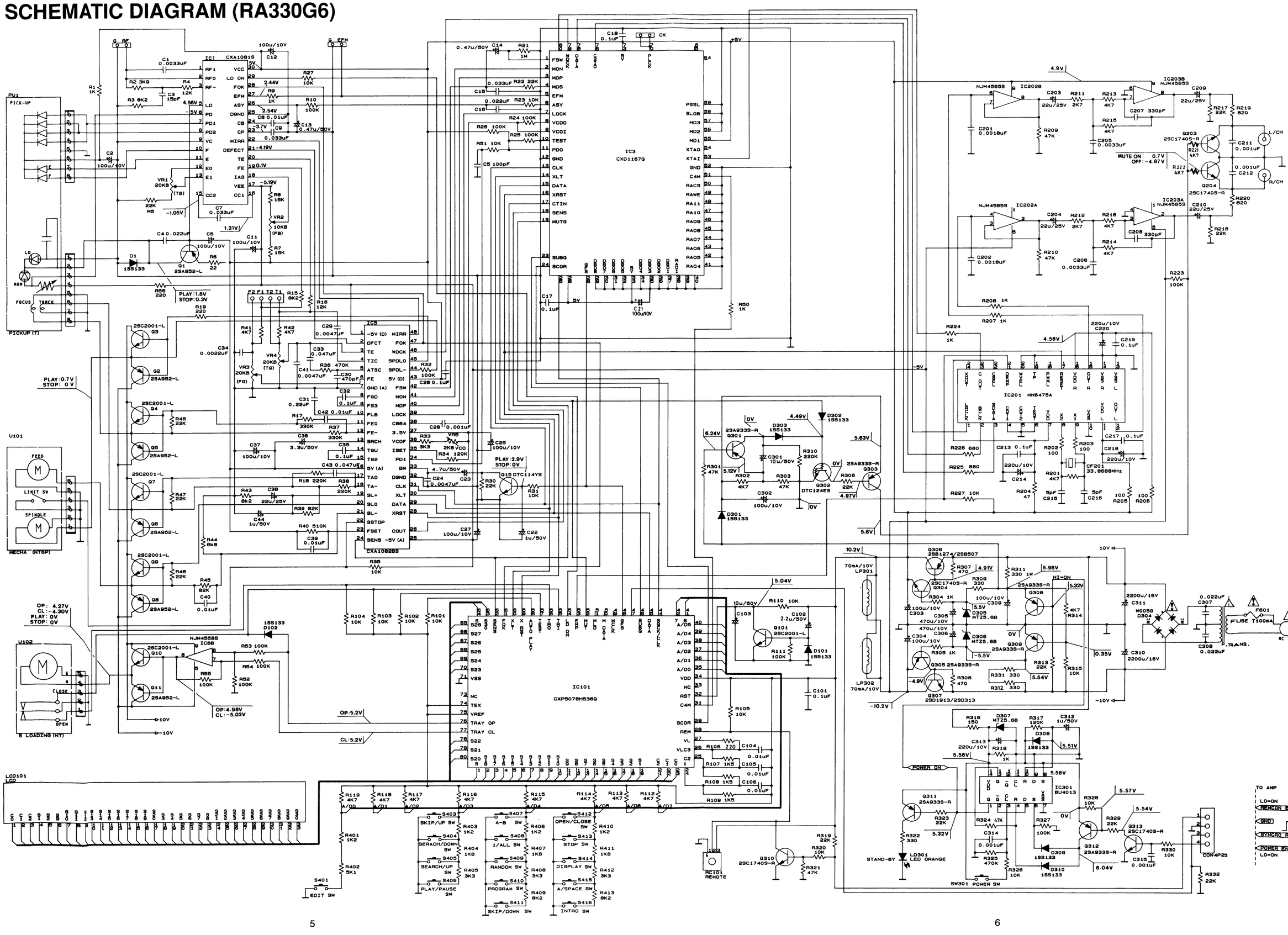

EXPLODED VIEW (RA330G6)

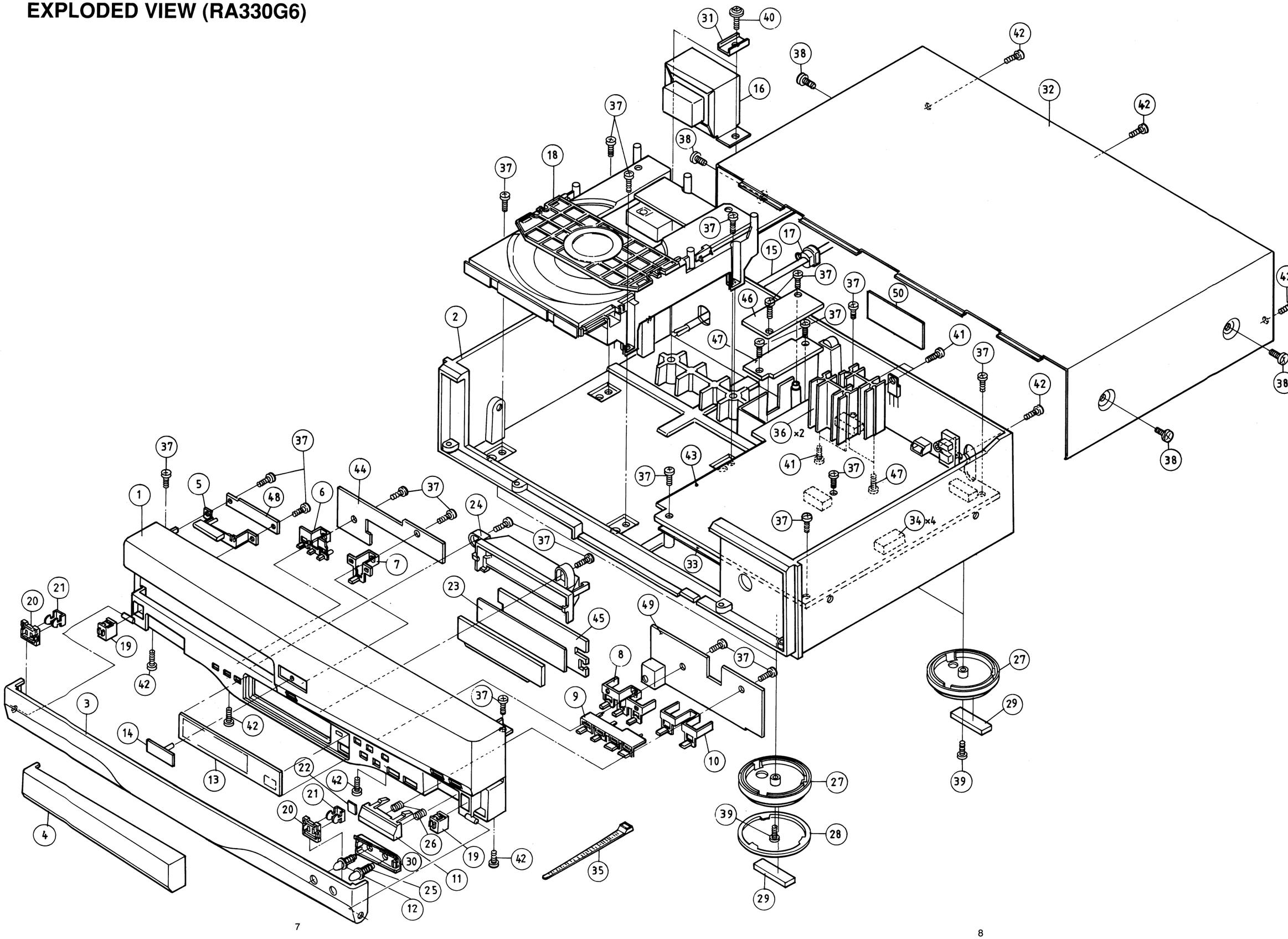

MECHANICAL EXPLODED VIEW (RA330G6)

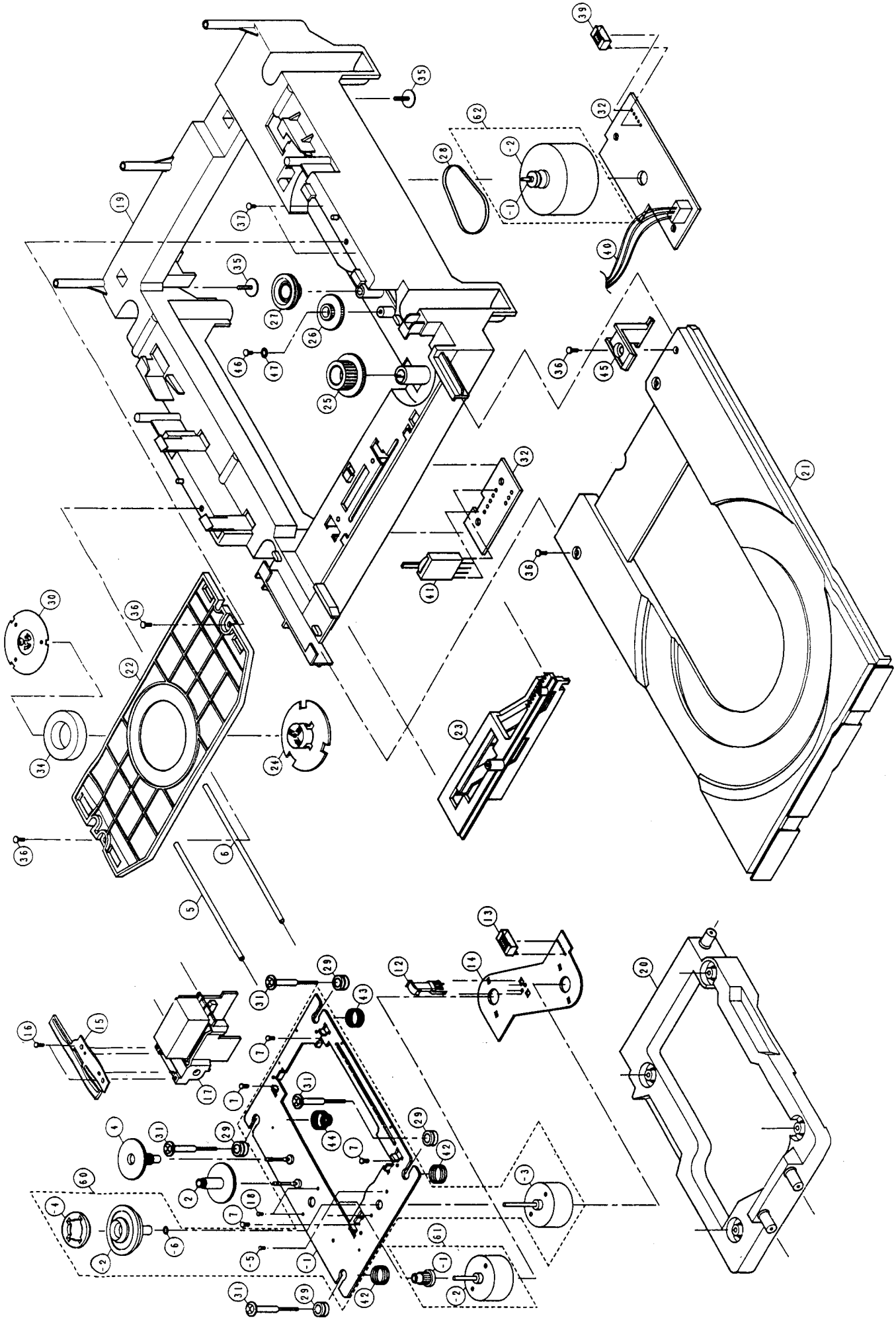

ADJUSTMENT (RA330G6)

Notes on Adjustment

1. Turn off power before removing top cover.
2. See Fig.1 & Fig 2 for adjustment.
3. Test disc is YEDS 18 TYPE 4 of SONY.
4. For adjustment the following filters is required

Band Pass Filter (B.P.F.)

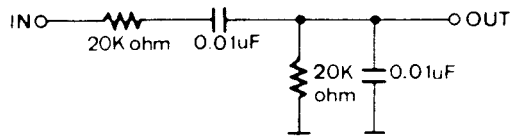

STOP	SUBJECT	INPUT	ADJUST FOR	MEASURE OUTPUT	ADJUST	DESCRIPTION
1	VCO	NON	VR5	Connect F counter to point CK and GND	F=4.3218 MHz ± 10KHz	EFM short across G
2	TE Balance	Play disc	VR1	Connect scope to point T1 and GND	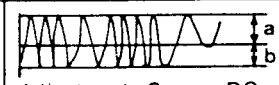 Adjust a=b. Scope : DC	T2 short across G
3	Focus offset	Play 7th music of DISC (No signal)	VR2	Connect scope to point RF and GND	Jitter is best	
4	Tracking Gain	Play 7th music of DISC (No signal)	VR4	Connect VTVM to point T1 through BPF and connect VTVM to point T2 through BPF	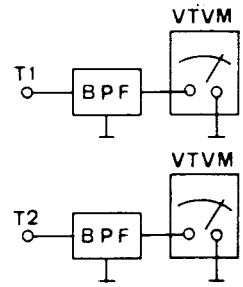 Adjust to T1=T2+3.5dB	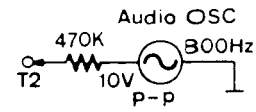
5	Focus Gain	Play 7th music of DISC (No signal)	VR3	Connect VTVM to point F1 through BPF and connect VTVM to point F2 through BPF	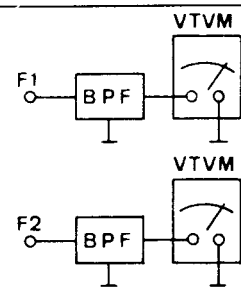 Adjust to F1=F2+2.5dB	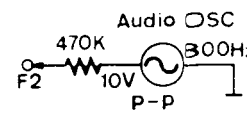
6	Repeat alignment step 4 and 5					

TEST POINT

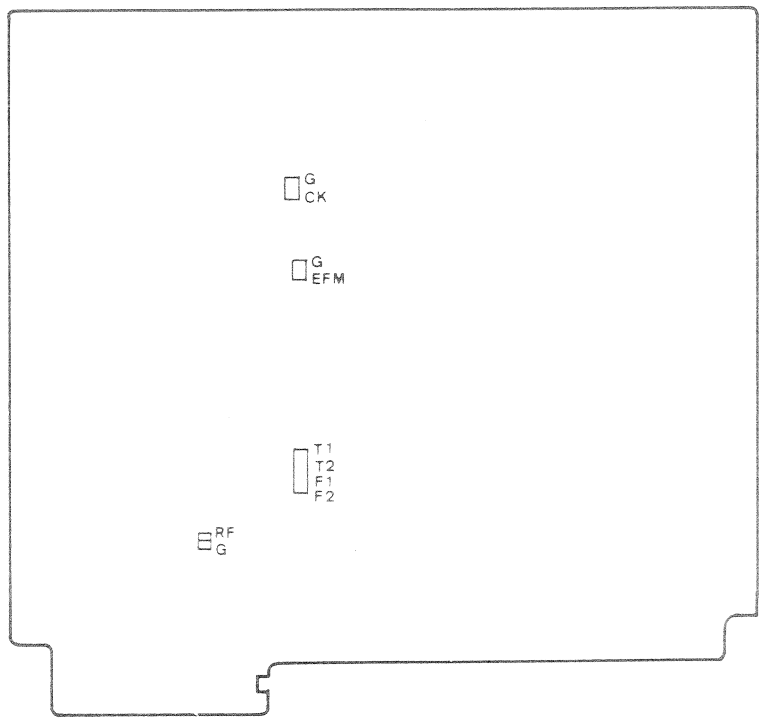

Figure 1

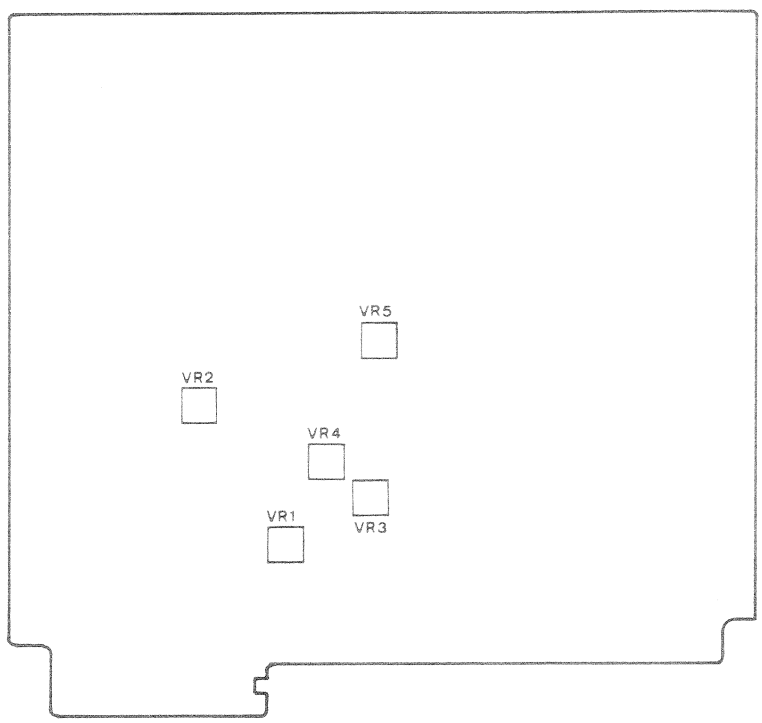

Figure 2

WIRING DIAGRAM (RA330G6)

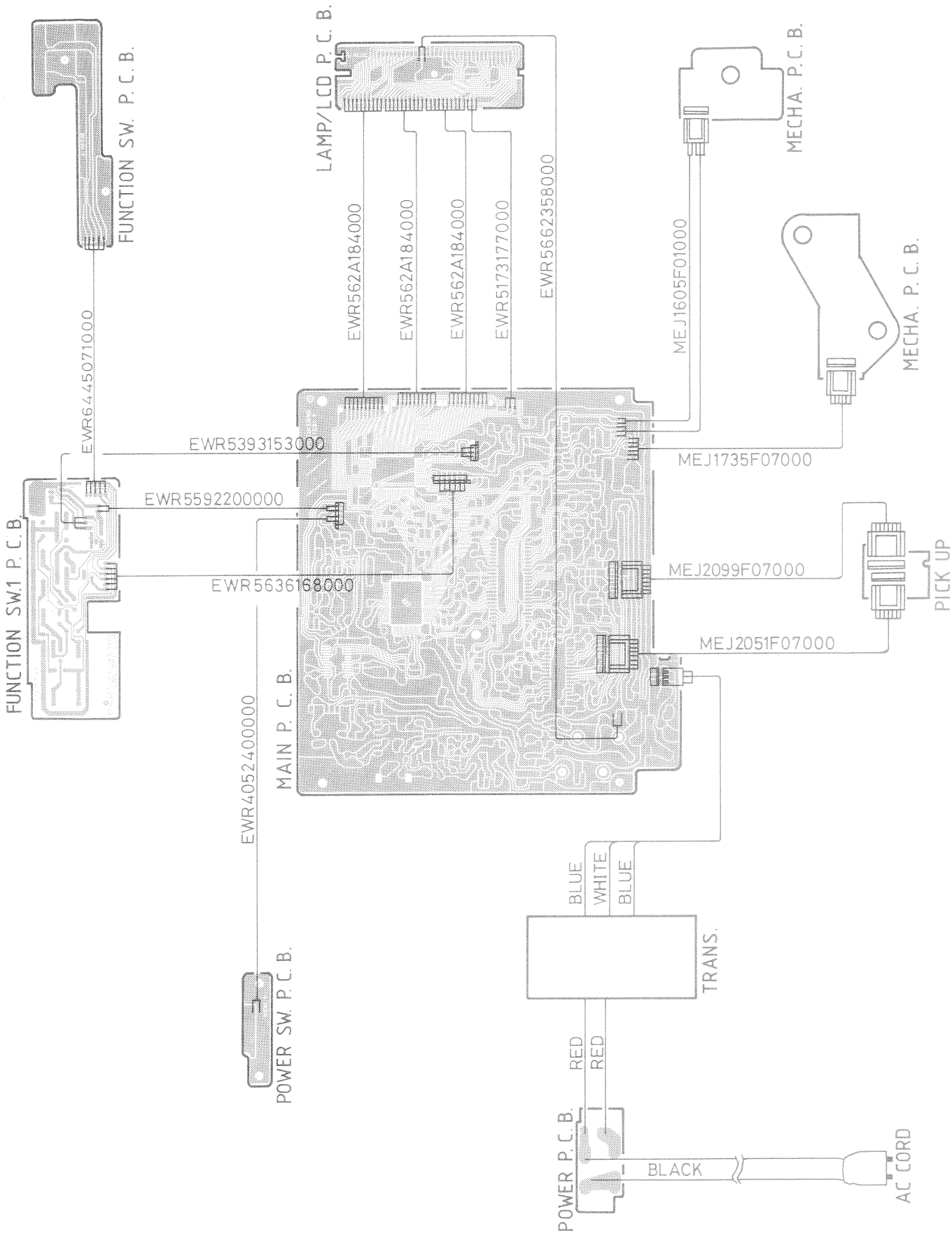

P.C.B. LAYOUT (RA330G6)

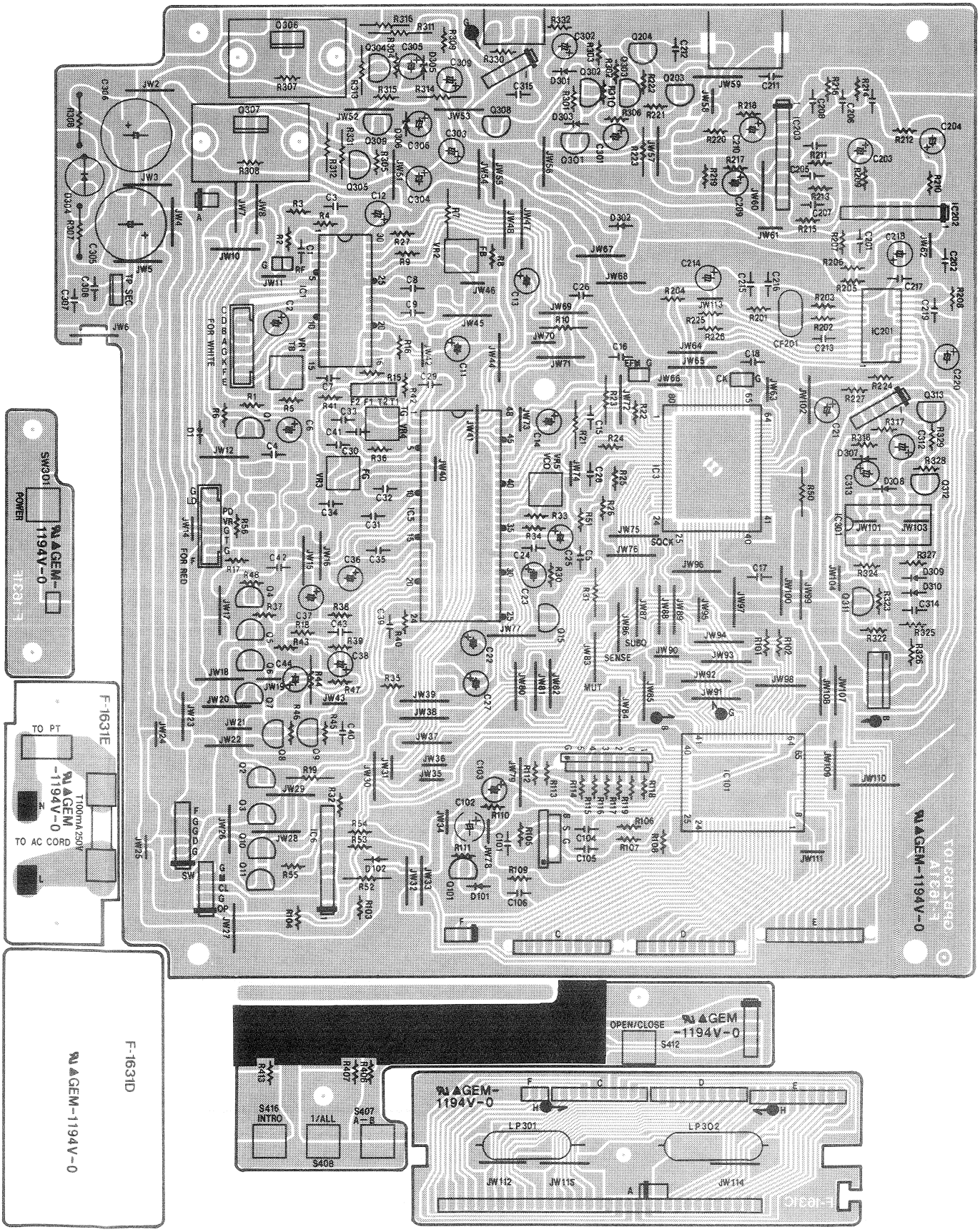

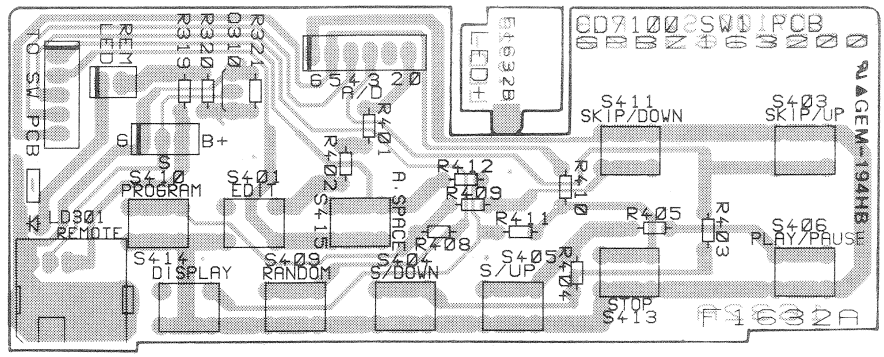

IC BLOCK DIAGRAM (RA330G6)

CXD 1167Q (Digital Signal Processor)

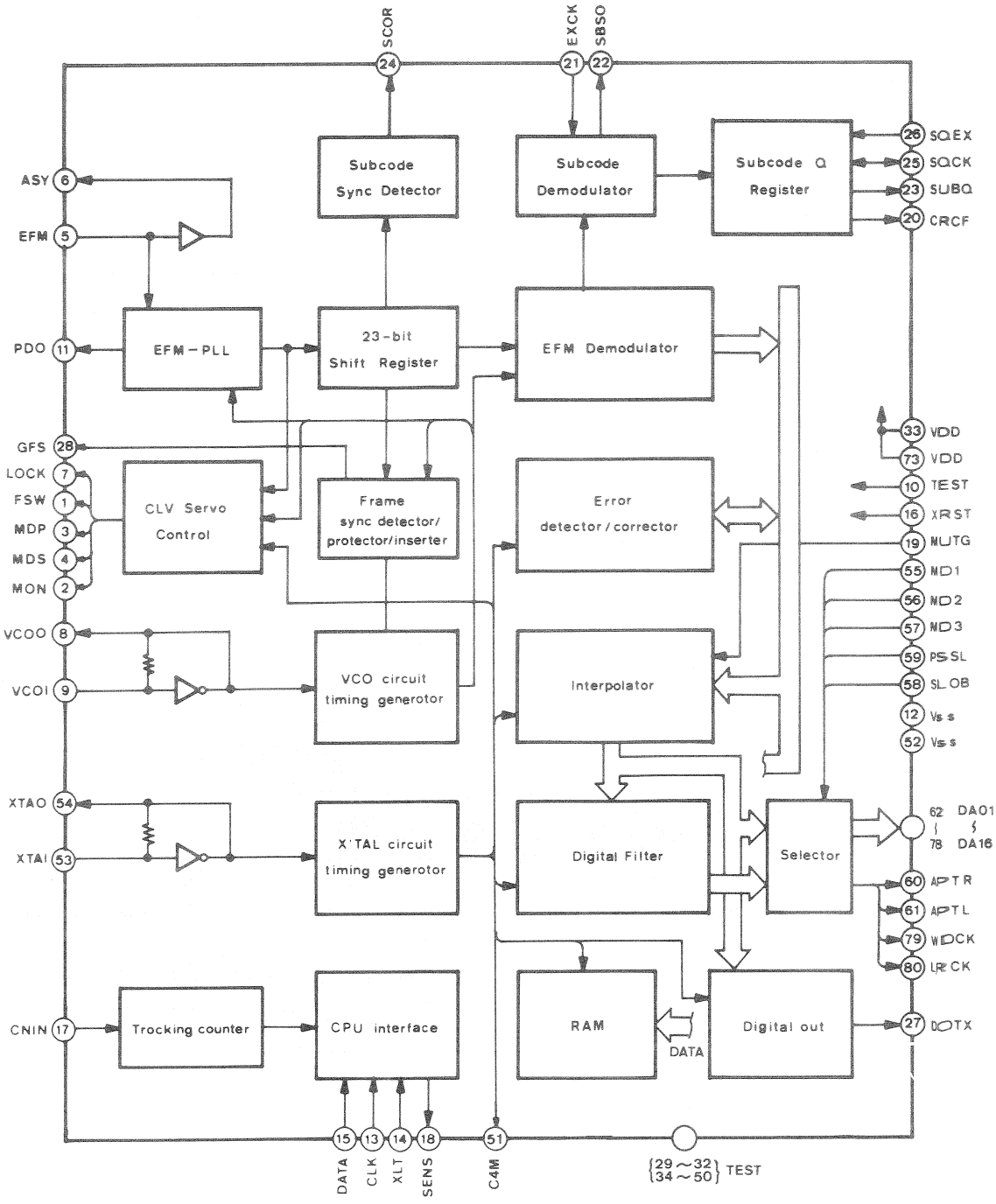

CXA1081S (RF Amplifier)

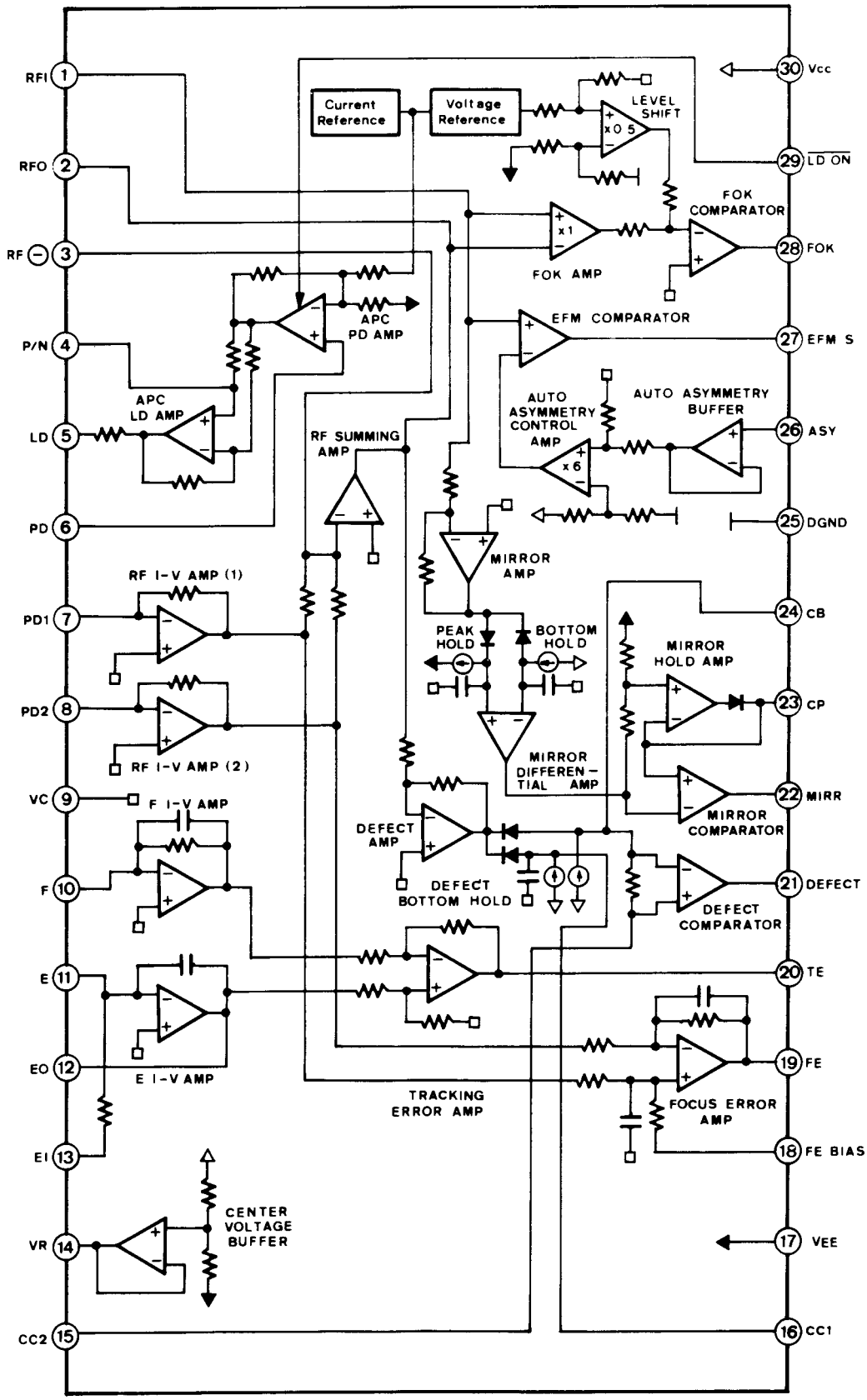

CXP5078H536Q (Micro Control)

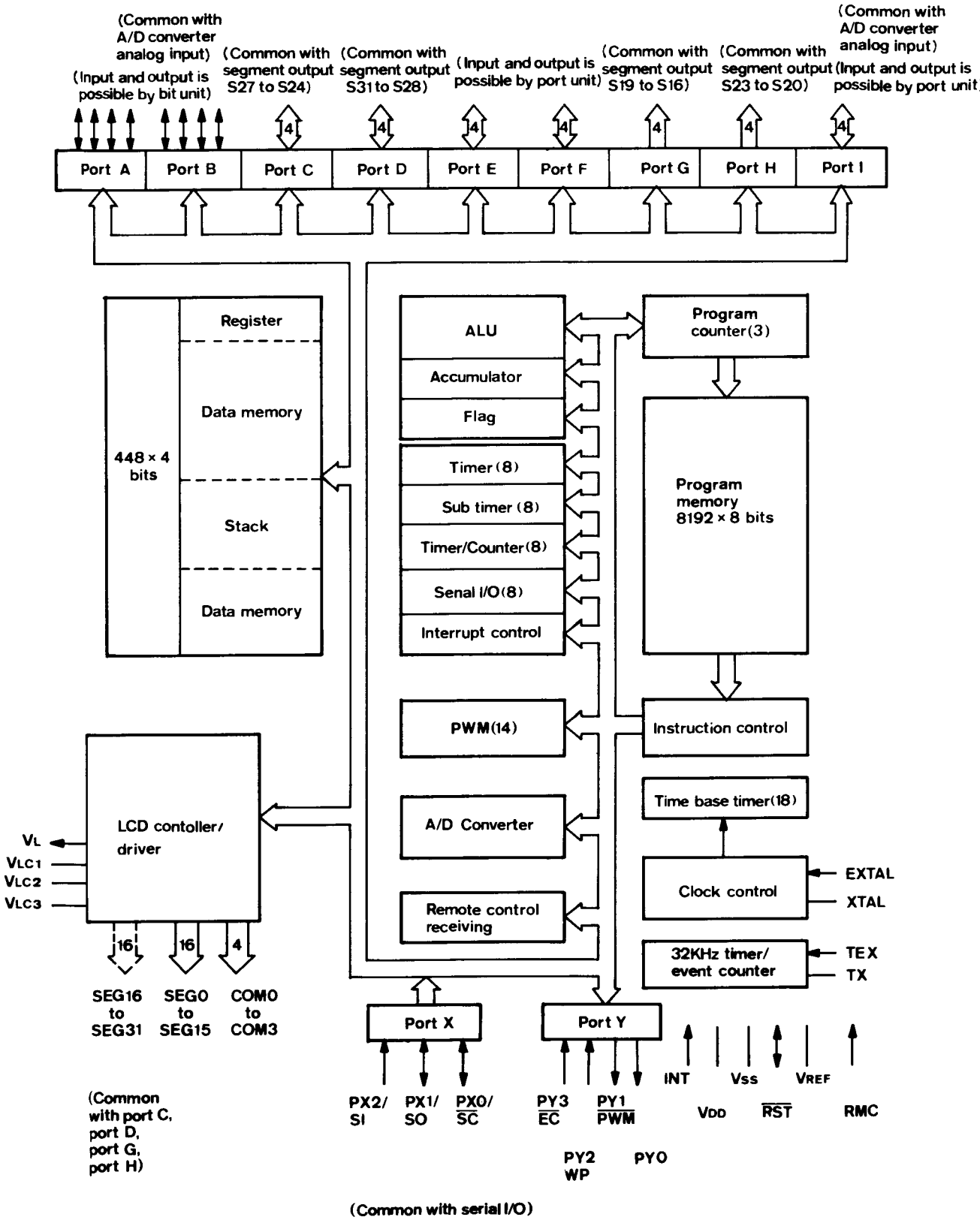

MN 6475A (Digital Filter With D/A Converter)

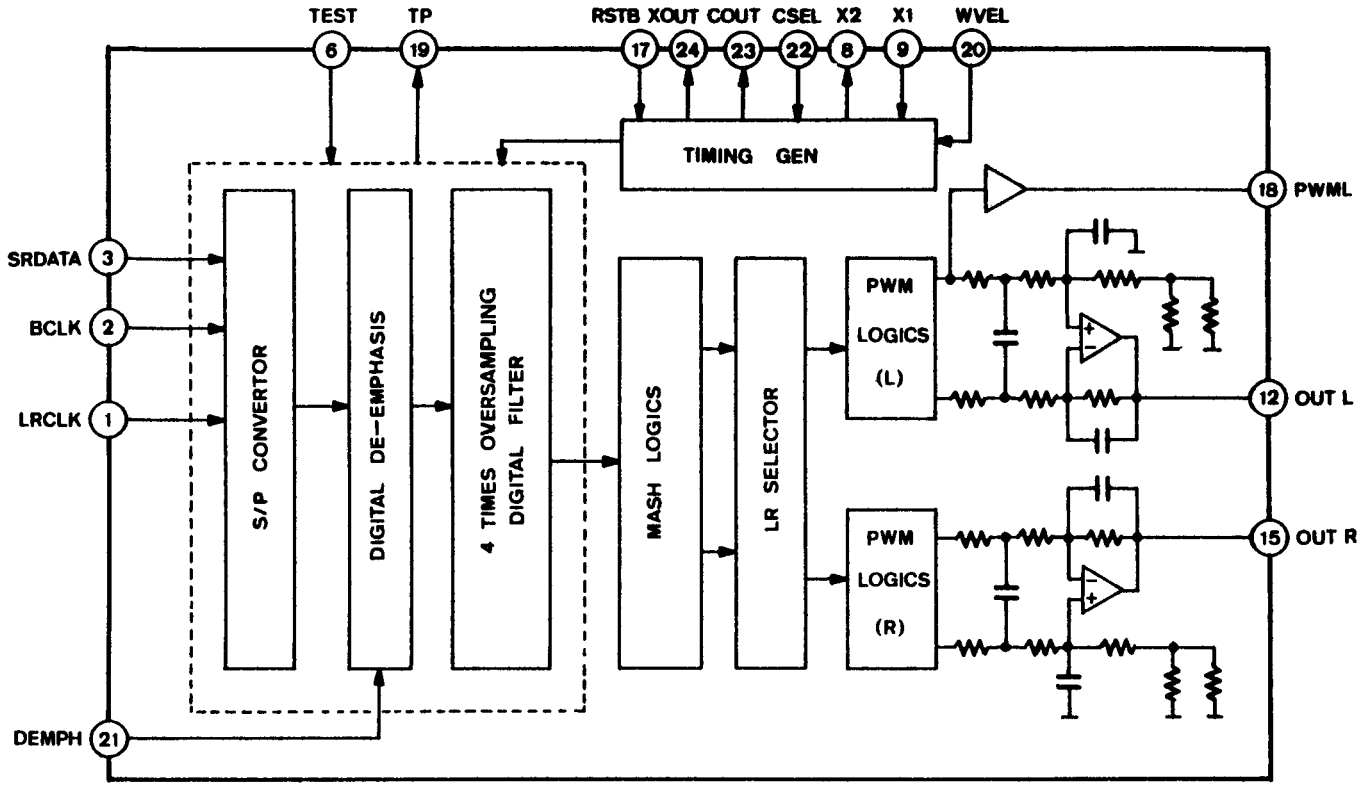

CXA1082 (Servo Signal Processor)

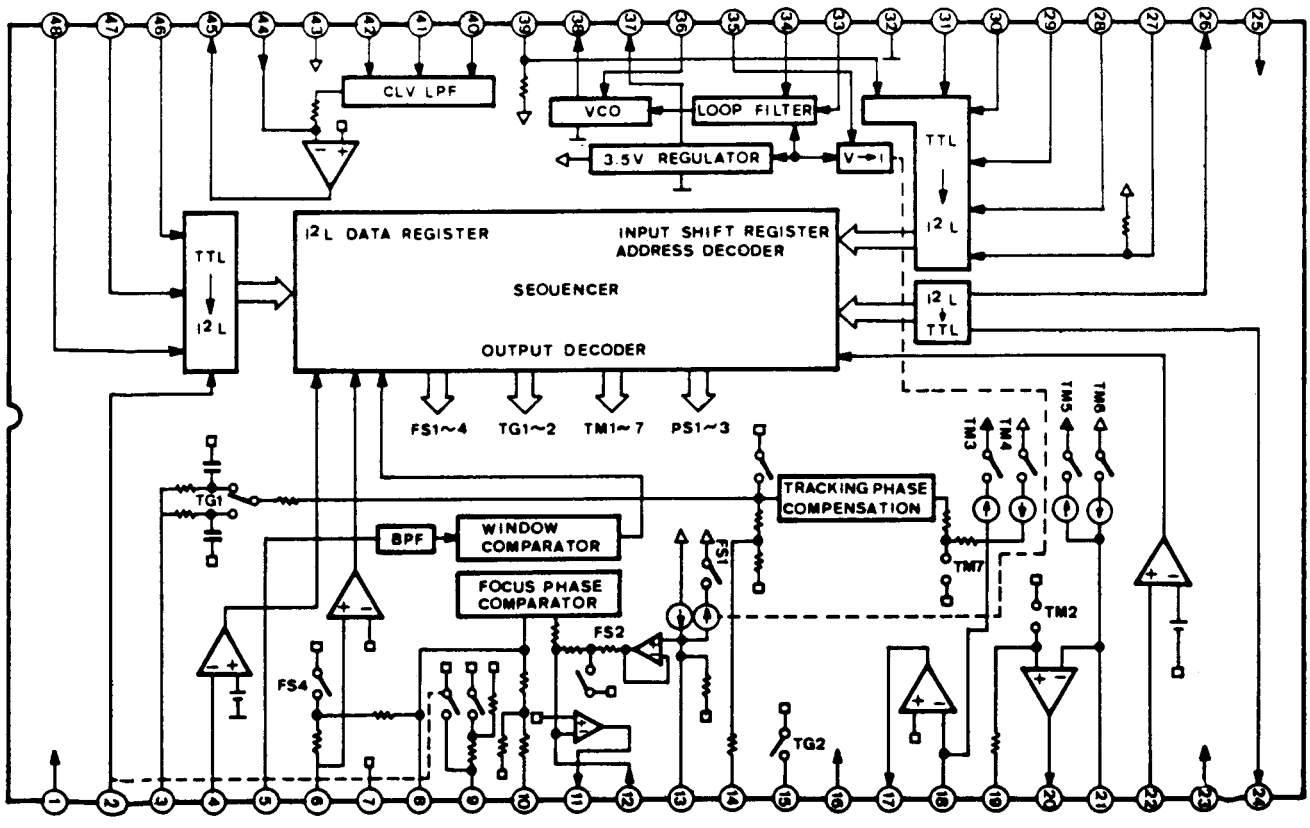

M4558S (ANALOG FILTER)

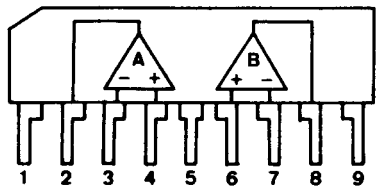

1	V+
2	A OUTPUT
3	A– INPUT
4	A+ INPUT
5	V–
6	B+ INPUT
7	B– INPUT
8	B OUTPUT
9	V+

BU 4013B (Dual D-Type Flip-Flop IC)

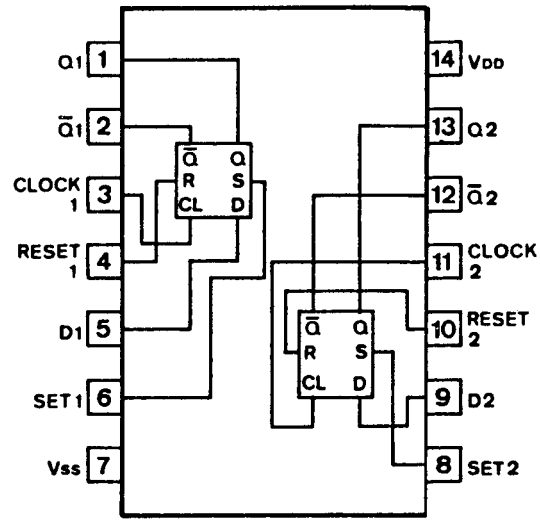

NJM4565 (Dual OP. Amp.)

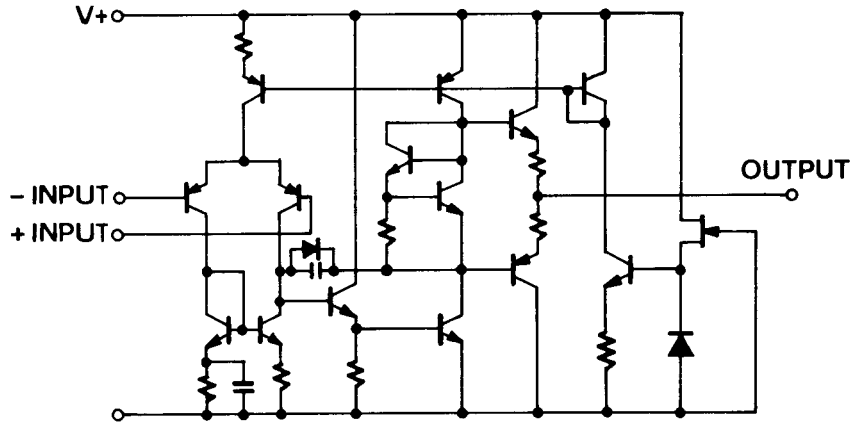

LC DISPLAY

RANDOM PROGRAM ONE ALL A-B INTRO SPACE
REMAIN EDIT

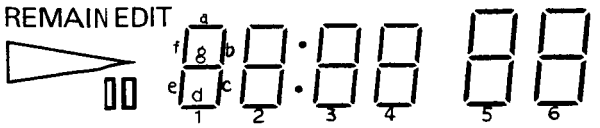

1 2 3 4 5
6 7 8 9 10
11 12 13 14 15
16 17 18 19 20 ov

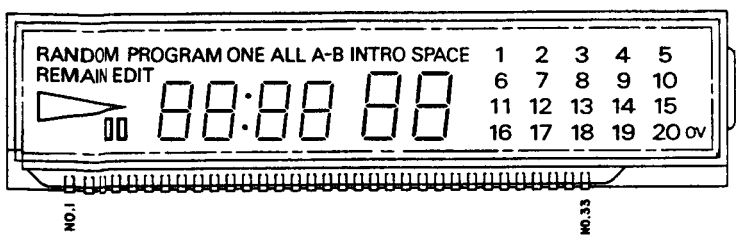

	COM.1	COM.2	COM.3
1	COM.1		
2		COM.2	
3			COM.3
4			
5		REMAIN	RANDOM
6		1f	1e
7	1a	1g	1d
8	ONE	1b	1c
9		2f	2e
10	2a	2g	2d
11	ALL	2b	2c
12	:	3f	3e
13	3a	3g	3d
14		3b	3c
15	A-	4f	4e
16	4a	4g	4d
17	B	4b	4c
18		5f	5e
19	5a	5g	5d
20		5b	5c
21		6f	6e
22	6a	6g	6d
23		6b	6c
24		SPACE	INTRO
25		PROG.	
26		EDIT	
27	1	3	2
28	6	1	16
29	7	1	17
30	8	1	18
31	9	1	19
32	10	1	20
33	ov	4	5

DECK RC-330G6

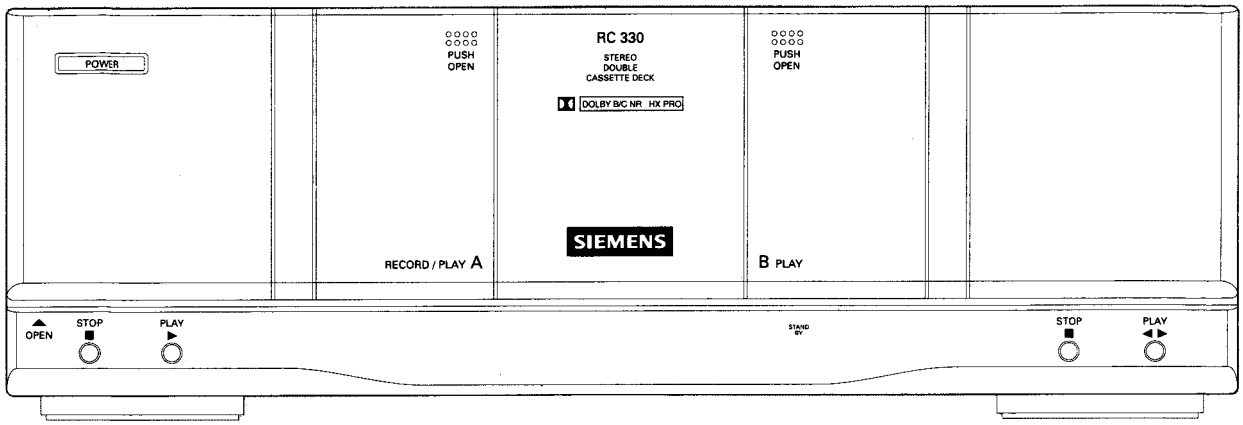

GENERAL TECHNICAL DATA

D E C K

Power supply : AC230V/50HZ
Oscillator frequency : 105KHz +/- 5%
Tape speed : 4.76Cm/sec. +/- <+/-2%>
Wow and flutter : <0.14%

Frequency response:Normal 40Hz...14KHz(TCC-106A)
CrO2 40Hz...14KHz(TCC-203A)
Metal 40Hz...14KHz(TCC-402A)

Signal-to-noise weighted:Normal > 55dB(TCC-106A)
CrO2 > 55dB(TCC-203A)
Metal > 55dB(TCC-402A)

Signal-to-noise weighted:Normal > 65dB(TCC-106A)
(with Dolby) CrO2 > 65dB(TCC-203A)
Metal > 65dB(TCC-402A)

Channel separation : >35dB(TCC-194)
(1KHz, with BPF)

Distortion : < 2.5%
(1KHz, without Dolby)
Signal cross talk : > 50dB(TCC-192)
(1K, with BPF)
Erase ratio : Normal > 60dB(TCC-106A)
(1K, with BPF) CrO2/Metal> 60dB(TCC-203A)
R/P head material : Hard permalloy
Erase head material : Ferrite

Connection

Socket	Impedance	Level
Microphone	1K	1mV

BLOCK DIAGRAM (RC330G6)

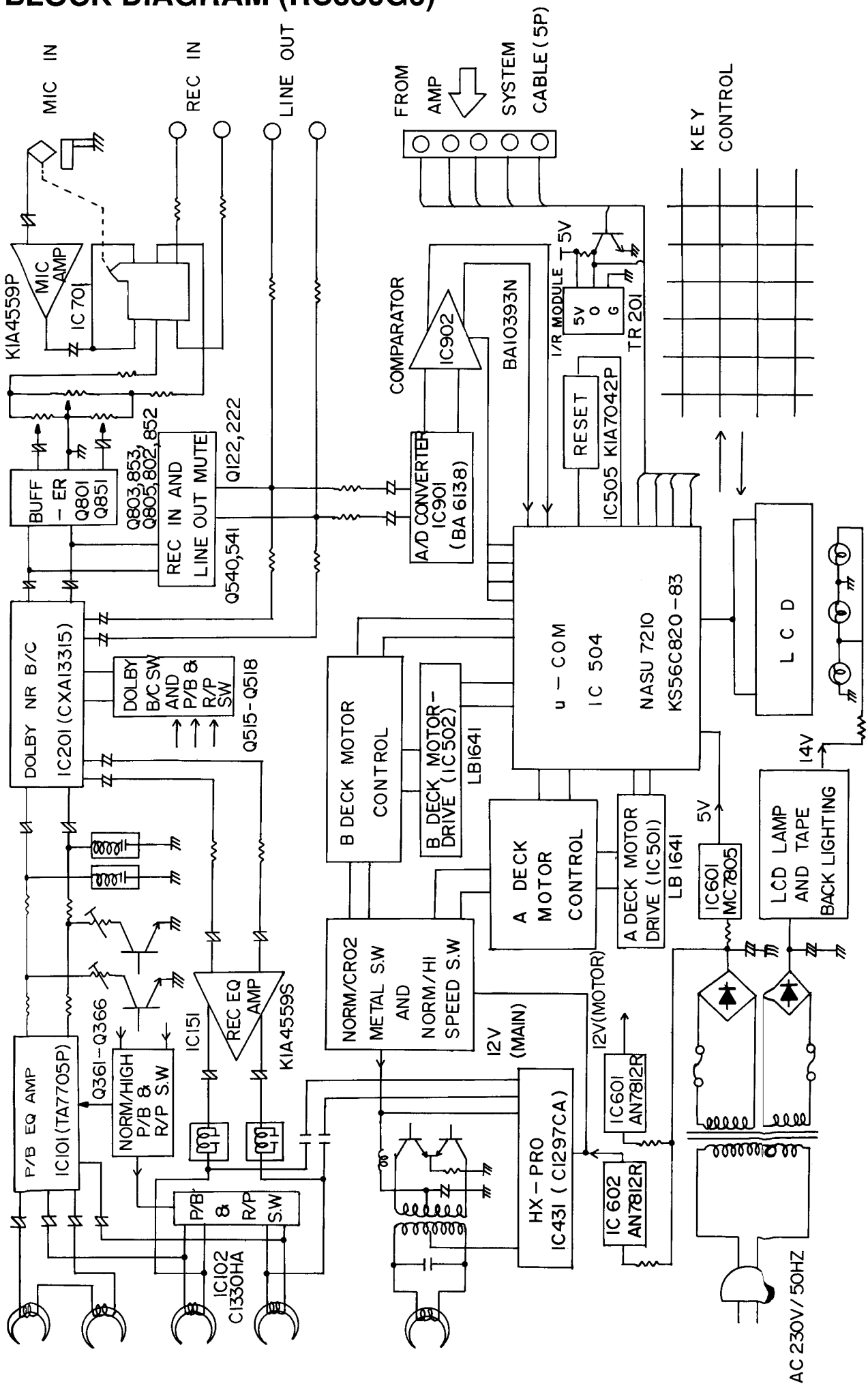

SCHEMATIC DIAGRAM (RC330G6)

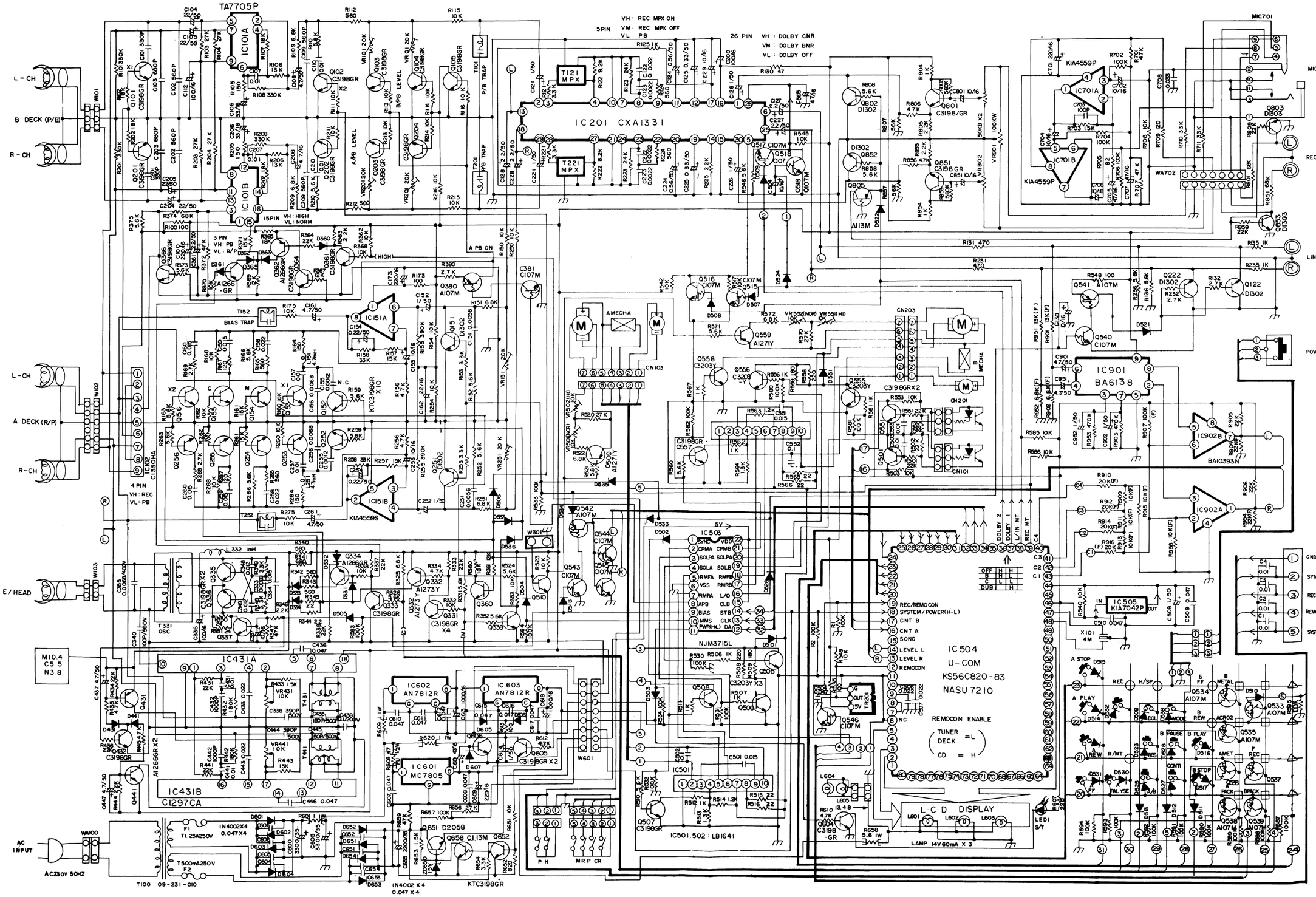

P.C.B. LAYOUT (RC330G6)

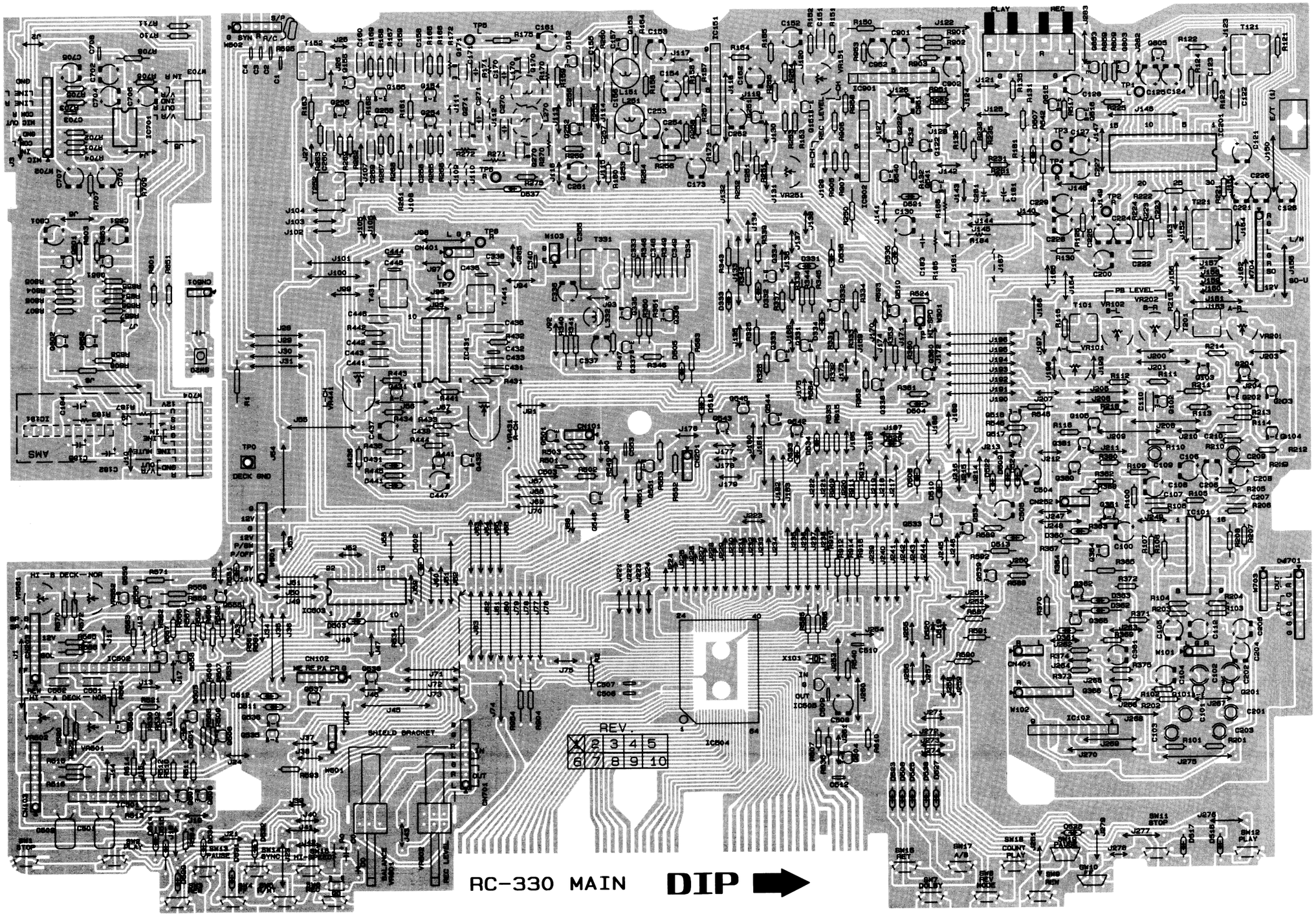

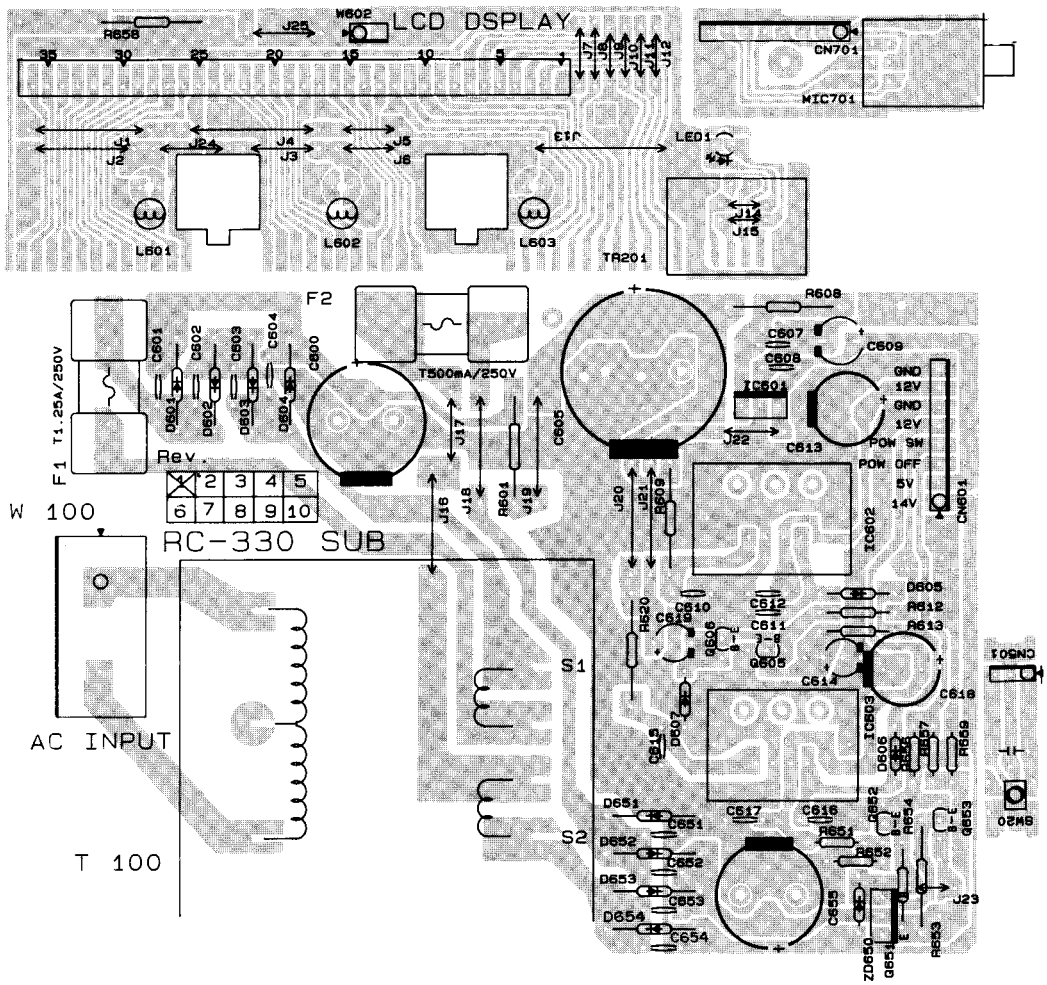
LCD DSPLAY
W602
R658
J25
35
30
25
20
15
10
5
J7
J8
J9
J10
J11
J12
CN701
MIC701
J1
J2
J24
J4
J3
J5
J6
J13
LED1
L601
L602
L603
TR201
J14
J15
F2
T500mA/250V
F1 T1.25A/250V
C601
C602
C603
C604
C600
D601
D602
D603
D604
Rev.
1 2 3 4 5
6 7 8 9 10
W 100
RC-330 SUB
J17
J16
J18
R601
J19
C605
R608
C607
C609
C608
IC601
J22
C613
GND
12V
GND
12V
POW SW
POW OFF
5V
14V
CN601
J20
J21
R609
IC602
D605
R612
R613
C610
C612
C611
R620
C619
Q606
Q605
C614
C618
S1
S2
AC INPUT
T 100
D607
C615
IC603
D606
R657
R659
D651
C651
D652
C652
D653
C653
D654
C654
C617
C616
R651
R652
Q652
R654
Q653
C655
J23
ZD650
Q651
R653
CN501
SW20

EXPLODED VIEW(RC330G6)

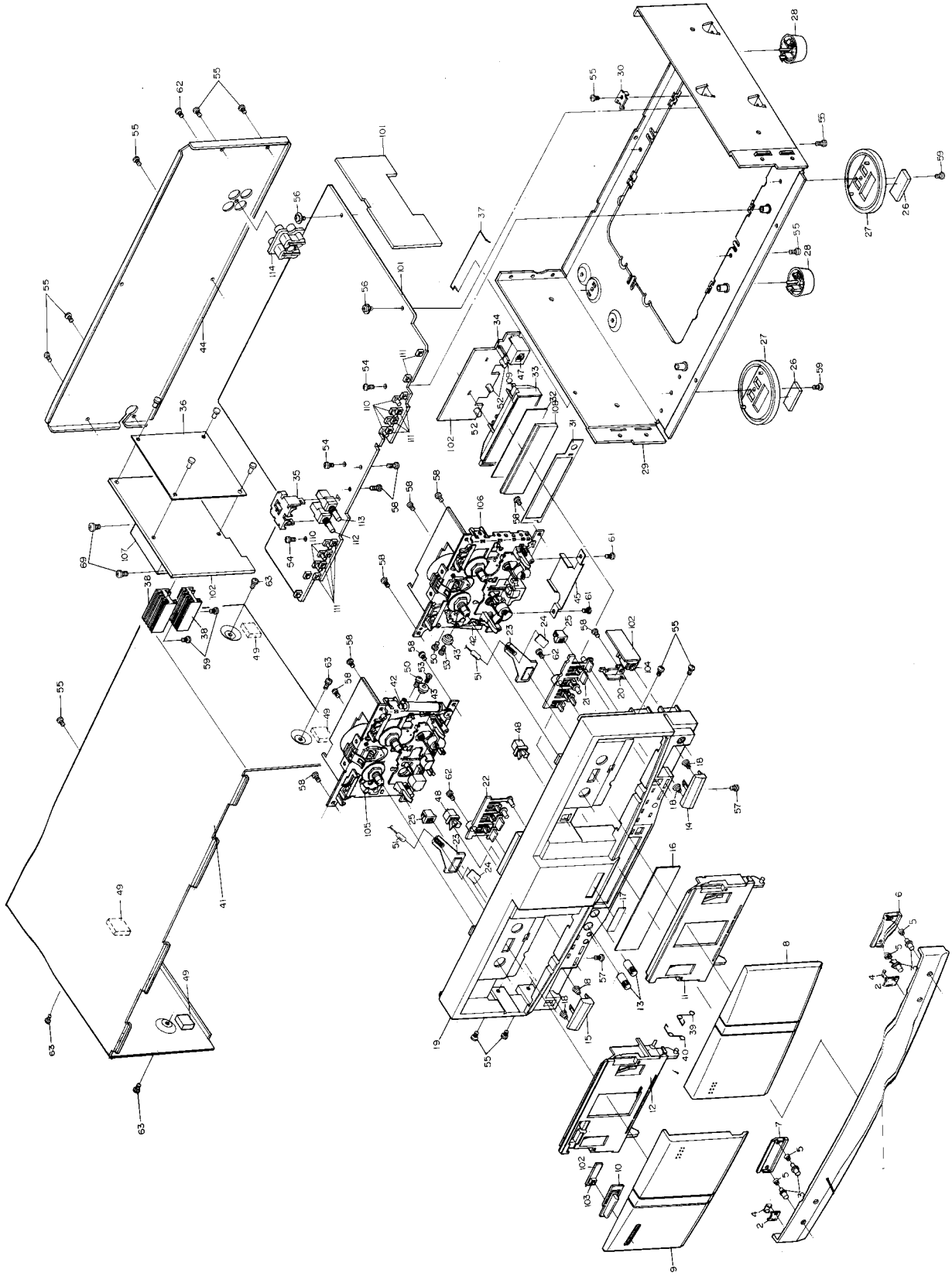

CASSETTE DECK EXPLODED VIEW (DECK A)

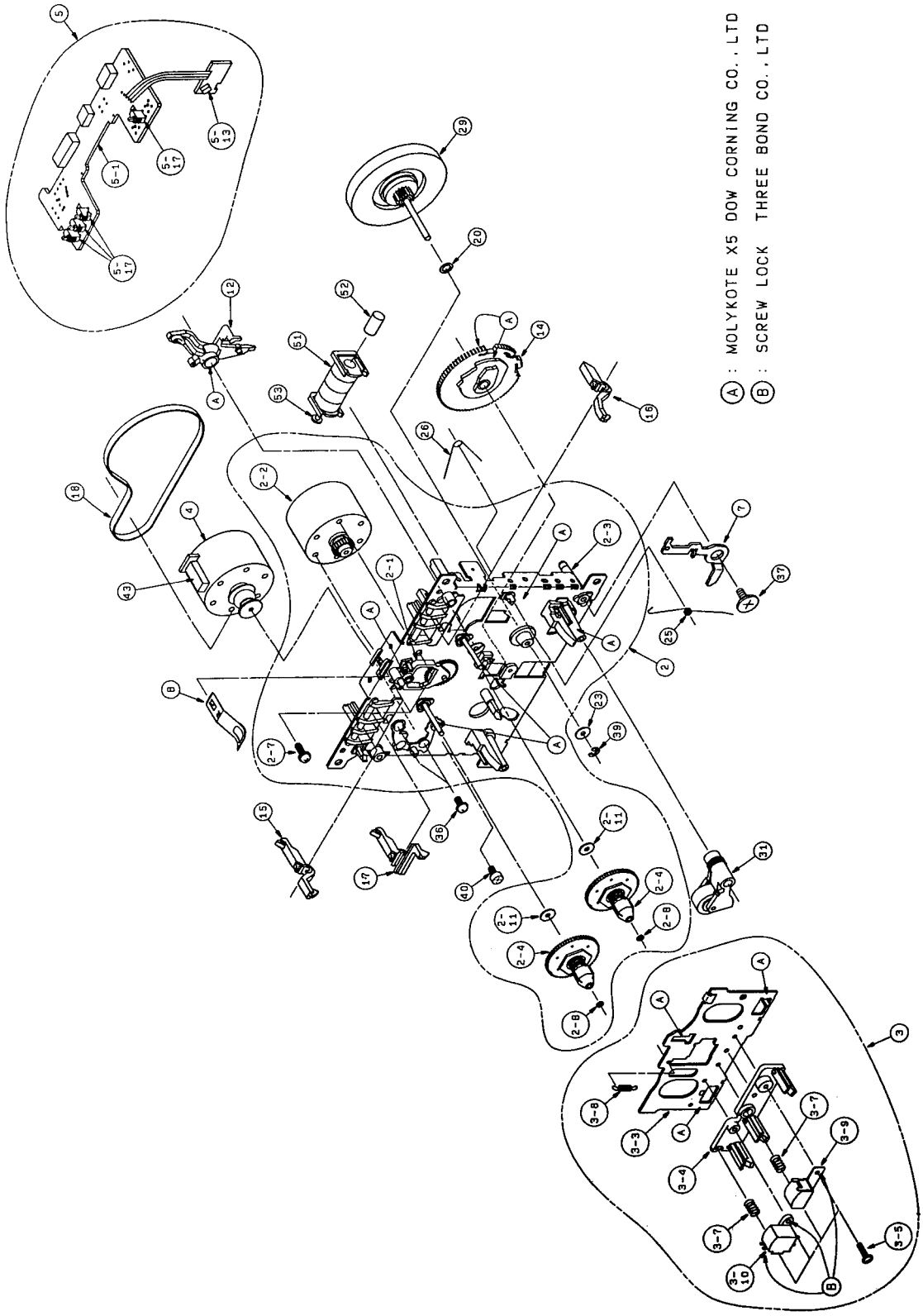

CASSETTE DECK EXPLODED VIEW (DECK B)

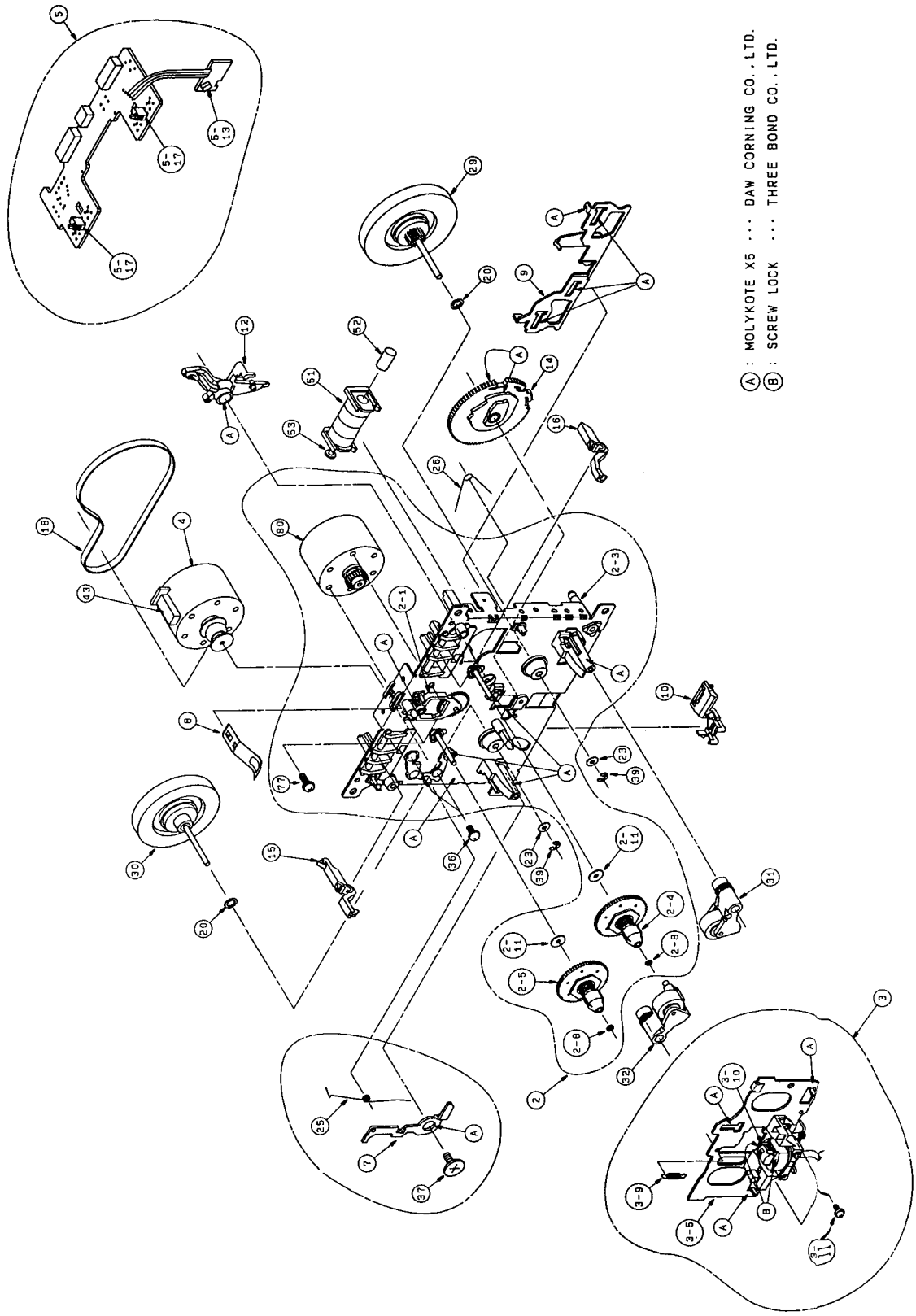

DECK ALIGNMENT(RC-330G6)

Step	Function	Preparation	Signal input	Adjusting element	Indicated value
1.	Spindle torque (A+B)				
1.1	Playback mode	Insert spindle torque test cassette.	-	-	30...70gcm 0.29...0.68Ncm
1.2	Fast forward mode		-	-	60...180gcm 0.59..1.74Ncm
1.3	Rewind		-	-	60...180gcm 0.59..1.74Ncm
2.	Azimuth				
2.1	Deck A	Insert 12.5KHz-testtape(TCC-154) Connect voltmeter(10M) to LINE OUT, left channel. Connect voltmeter(10M) to LINE OUT, right channel. Switch deck A to play back mode.		Azimuth -screw deck A	Max. 12.5KHz-level
2.2	Deck B	Insert 12.5KHz-testtape. Connect voltmeter as step 2.1. Set deck B to play back mode.		Azimuth -screw deck B	Max. 12.5KHz-level
3.	Tape speed deck A	Insert 3KHz-testtape (TCC-112). Connect frequency counter to LINE OUT, left and right channel			After you adjust Hi-speed, adjust normal-speed
3.1	High speed	Short(W301 wafer pin) Set deck A to play back mode.		VR502	6000+/-20Hz
3.2	Normal speed	Set "high-speed-switch" to "off" -position. Switch deck A to play back mode.	-	VR501	3000+/-20Hz
4.	Tape speed deck B	Insert 3KHz-testtape (TCC-112). Connect frequency counter to LINE OUT, left and right channel			
4.1	High speed	Short (W301 wafer pin) Set deck B to play back mode.	-	VR551	6000Hz+/-20Hz
4.2	Normal speed	Set "high-speed-switch" to "off" -position. Switch deck B to play back mode.	-	VR552	3000+/-20Hz

5.	Playback gain deck A	Insert testtape TCC-130 from ABEX. Connect voltmeter to LINE OUT to right channel. Connect voltmeter to LINE OUT, left channel. Set deck A to play back mode.	(left channel) (right channel)	VR101 VR201	480mV 480mV
6.	Playback gain deck B	Connect voltmeter as step 5. Switch deck B to play back mode.	(left channel) (right channel)	VR102 VR202	500mV 500mV
7.	Bias play back trap (Dubbing leakage)	Insert metal blank-testtape (TCC-402A) to deck A. Connect voltmeter to LINE OUT, left channel. Connect voltmeter to LINE OUT, right channel. Set deck A to record mode and deck B to play back mode. With high speed on.	(left channel) (right channel)	T101 T201	<6mV <6mV
8.	Bias recording trap	Insert Metal blank-testtape(TCC-402A) to deck A. Connect voltmeter to TP 5, left channel. Connect voltmeter to TP 6, right channel. Set deck A to record mode.	(left channel) (right channel)	T152 T252	<200mV <200mV
9.	MPX Filter	Insert blank-testtape to deck A with record mode. connect voltmeter to LINE OUT. left and righ channel supply the record input signal with 400Hz 500mV and adjust the VR. change the suppling signal 19KHz and Dolby NR B mode. Confirm the difference in dB between Dolby NR off and Dolby NR B.	(left channel) (right channel)	T121 T221	30dB 30dB
10.	HX-PRO Coil	Insert metal blank-testtape(TCC-402A) to deck A. Connect voltmeter to TP7 left channel. Connect voltmeter to TP8 righ channel. Set deck A to record mode.	(left channel) (right channel)	T431 T441	32V 32V
11.	Record gain deck A	Set AF-generator to REC IN. Connect voltmeter to LINE OUT, left channel. Connect voltmeter to LINE OUT, right channel. Insert normal blank-testtape (TCC-106A) to deck A. Set deck A to record mode.	1KHz,150mV (left channel) (right channel)	 VR151 VR251	 240mV 240mV
12.	Frequency response	Set AF-generator to LINE IN. Connect voltmeter to LINE OUT, left channel. Connect voltmeter to LINE OUT, right channel. Insert normal blank-testtape(TCC-106A) to deck A. Set deck A to record mode.	12.5KHz, 150mV (left channel) (right channel)	 VR441 VR431	 150mV 150mV

LOCATION / ALIGNMENT POINTS

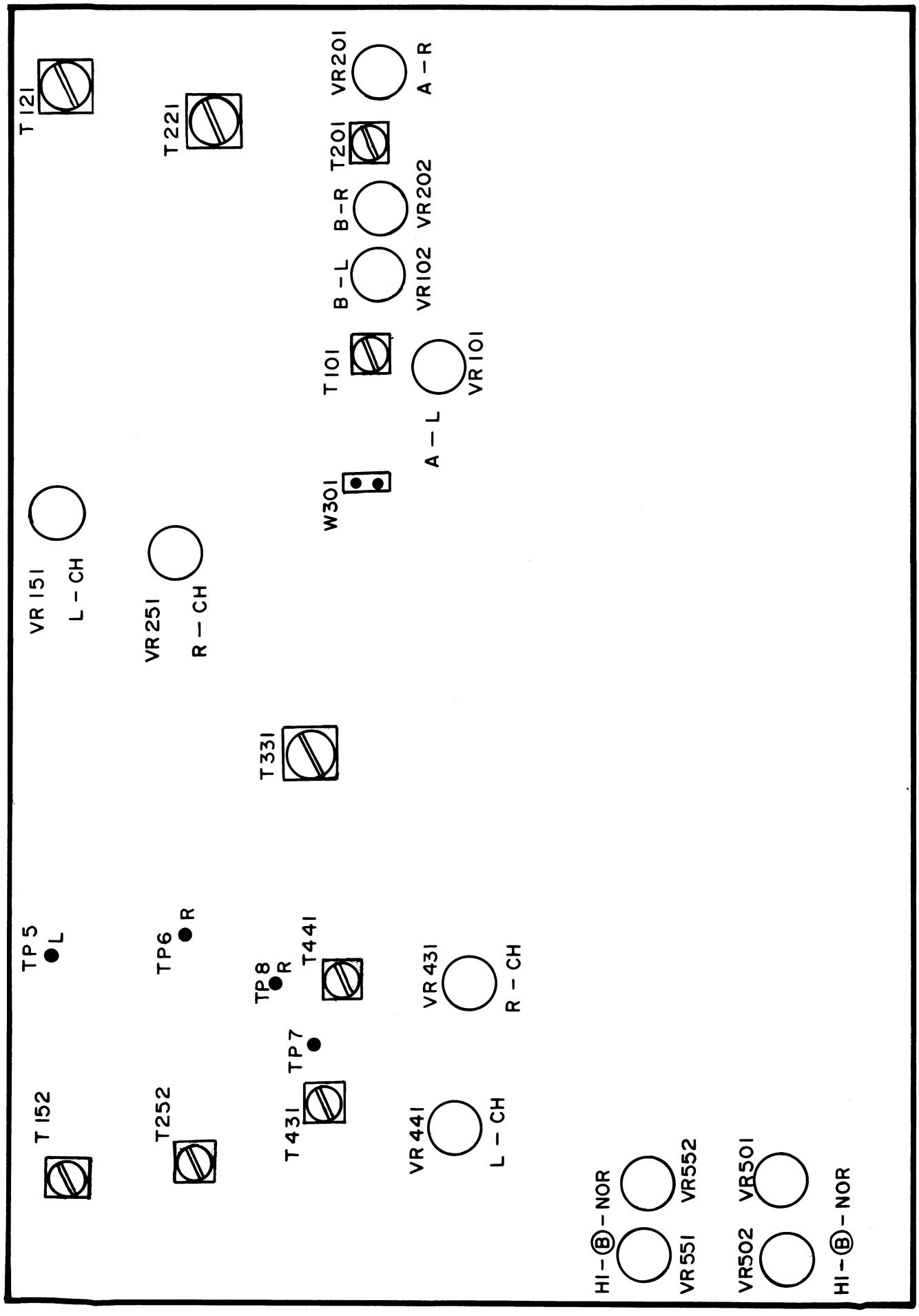

WIRING DIAGRAM (RC330G6)

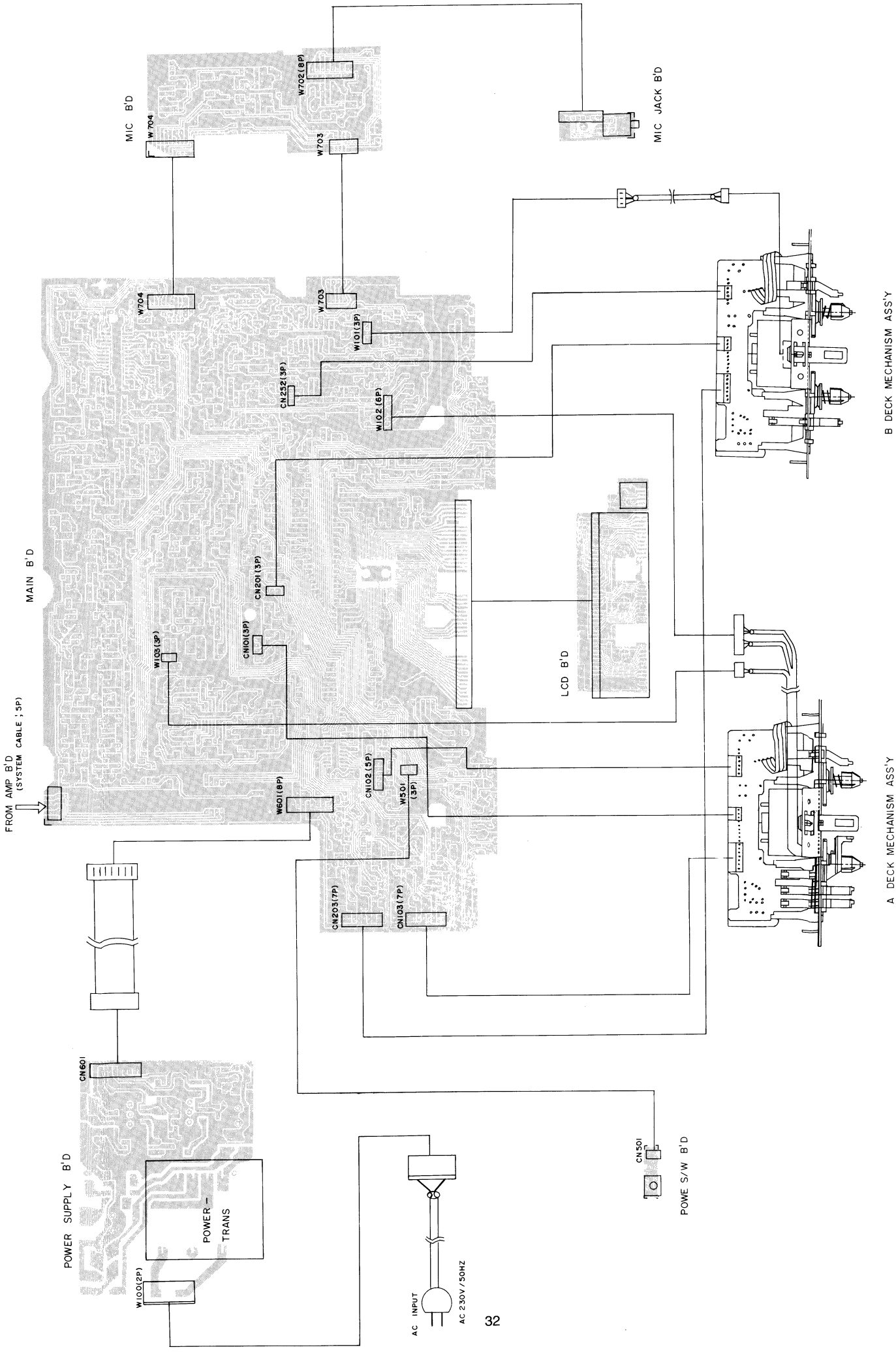

IC BLOCK DIAGRAM (RC330G6)

LB1641

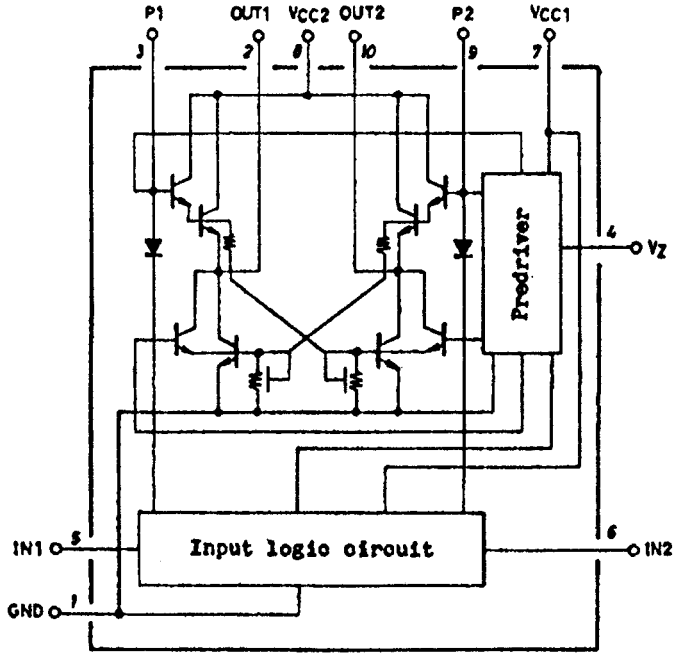

TA7705P

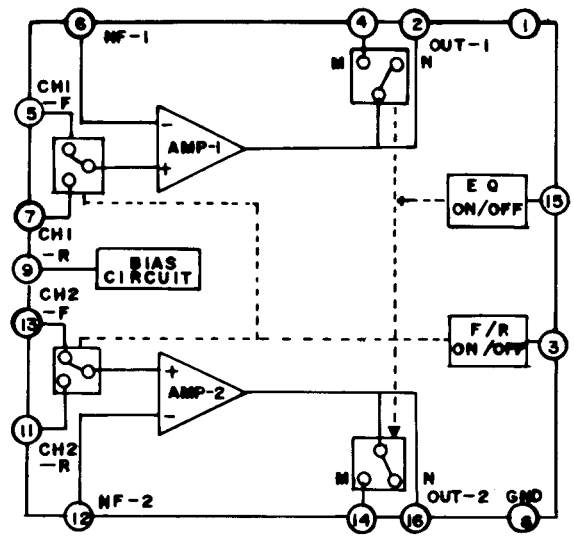

UPC1297CA

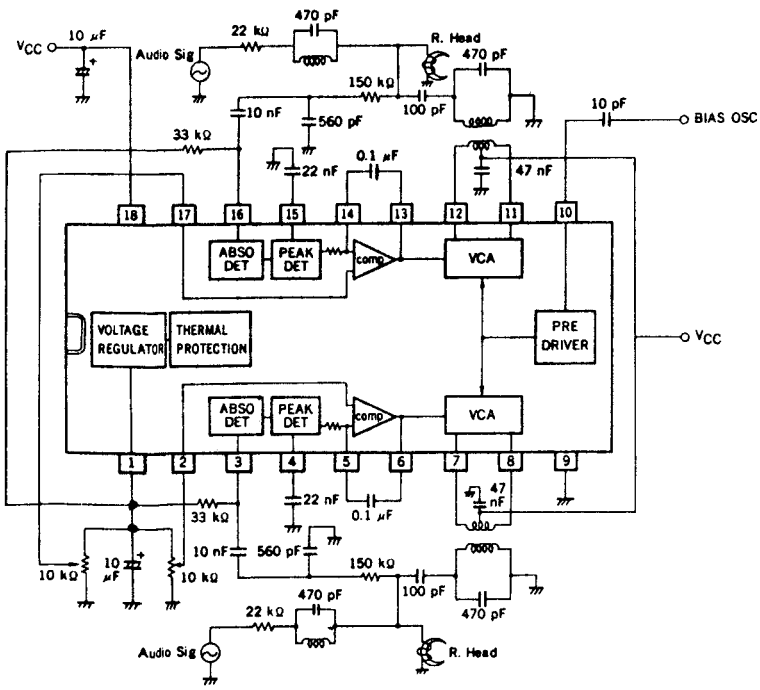

BA6138

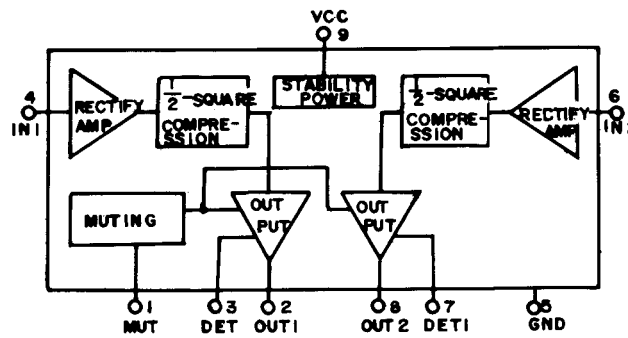

BA10393N

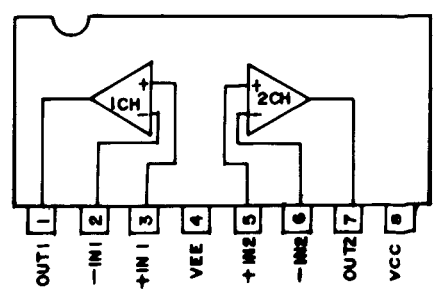

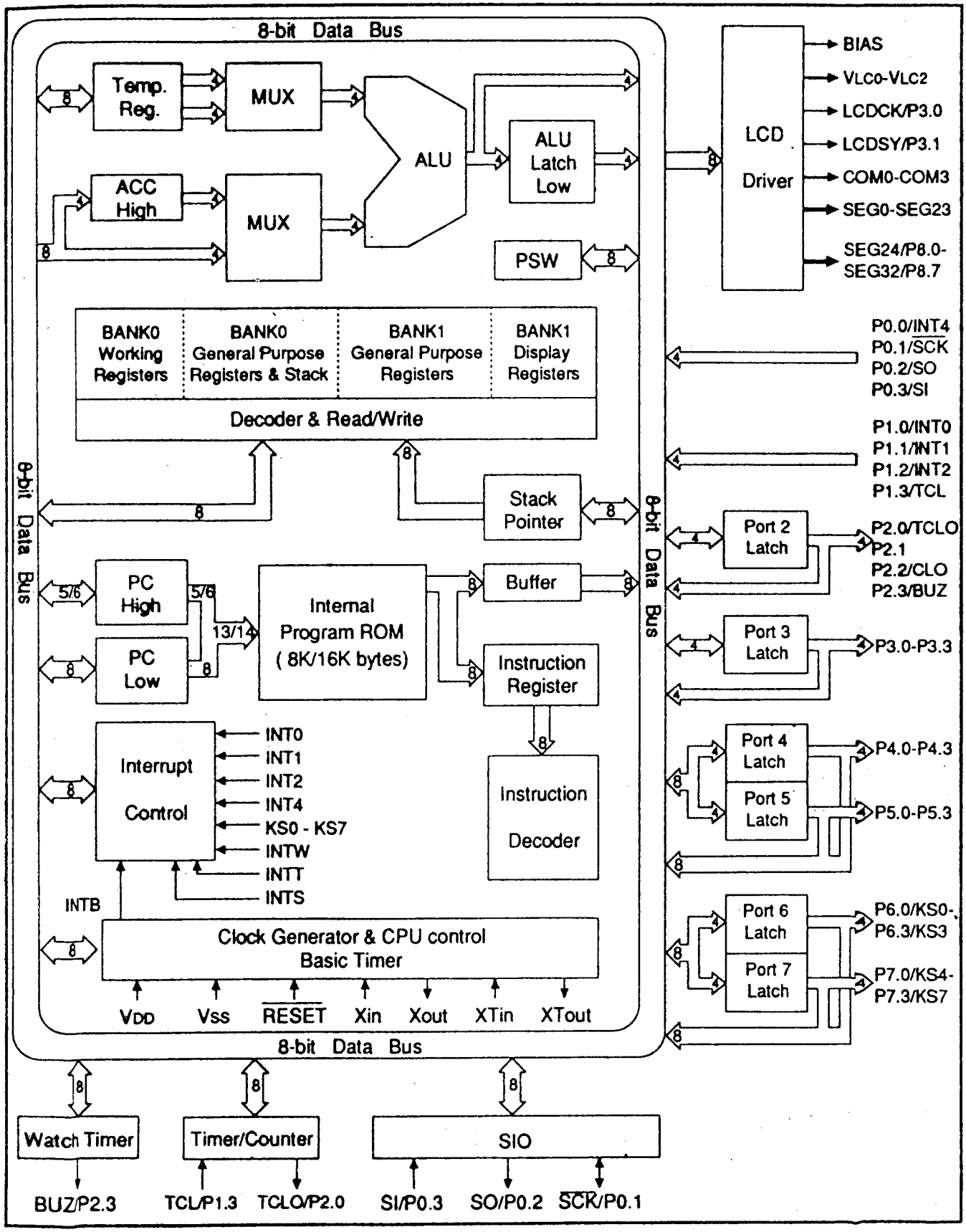
8-bit Data Bus
Temp. Reg.
MUX
ALU
ALU Latch Low
ACC High
MUX
PSW
LCD Driver
BIAS
VLC0-VLC2
LCDCK/P3.0
LCDSY/P3.1
COM0-COM3
SEG0-SEG23
SEG24/P8.0-SEG32/P8.7
BANK0 Working Registers
BANK0 General Purpose Registers & Stack
BANK1 General Purpose Registers
BANK1 Display Registers
Decoder & Read/Write
P0.0/INT4
P0.1/SCK
P0.2/SO
P0.3/SI
P1.0/INT0
P1.1/INT1
P1.2/INT2
P1.3/TCL
Stack Pointer
Port 2 Latch
P2.0/TCLO
P2.1
P2.2/CLO
P2.3/BUZ
PC High
PC Low
Internal Program ROM (8K/16K bytes)
Buffer
Port 3 Latch
P3.0-P3.3
Instruction Register
Interrupt Control
INT0
INT1
INT2
INT4
KS0 - KS7
INTW
INTT
INTS
Instruction Decoder
Port 4 Latch
Port 5 Latch
P4.0-P4.3
P5.0-P5.3
INTB
Clock Generator & CPU control Basic Timer
Port 6 Latch
Port 7 Latch
P6.0/KS0-P6.3/KS3
P7.0/KS4-P7.3/KS7
VDD
Vss
RESET
Xin
Xout
XTin
XTout
8-bit Data Bus
Watch Timer
Timer/Counter
SIO
BUZ/P2.3
TCL/P1.3
TCLO/P2.0
SI/P0.3
SO/P0.2
SCK/P0.1

CXA1331S

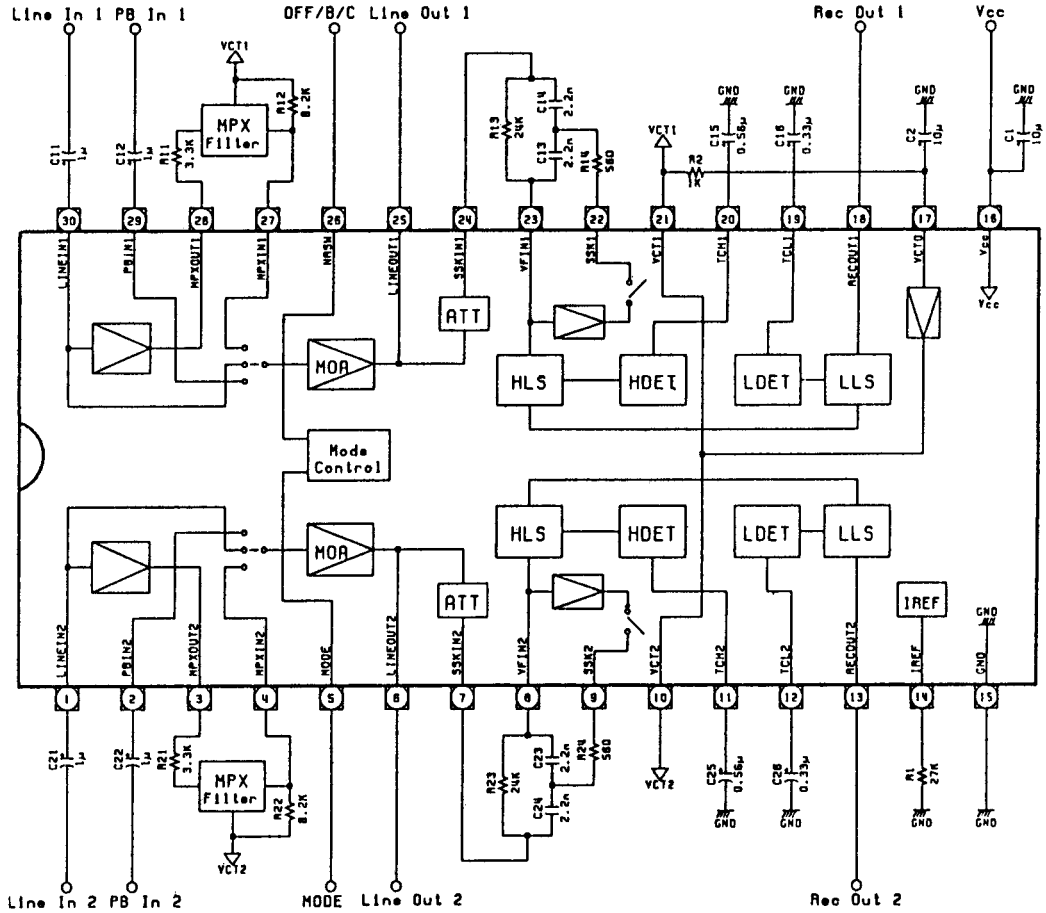

MC7805

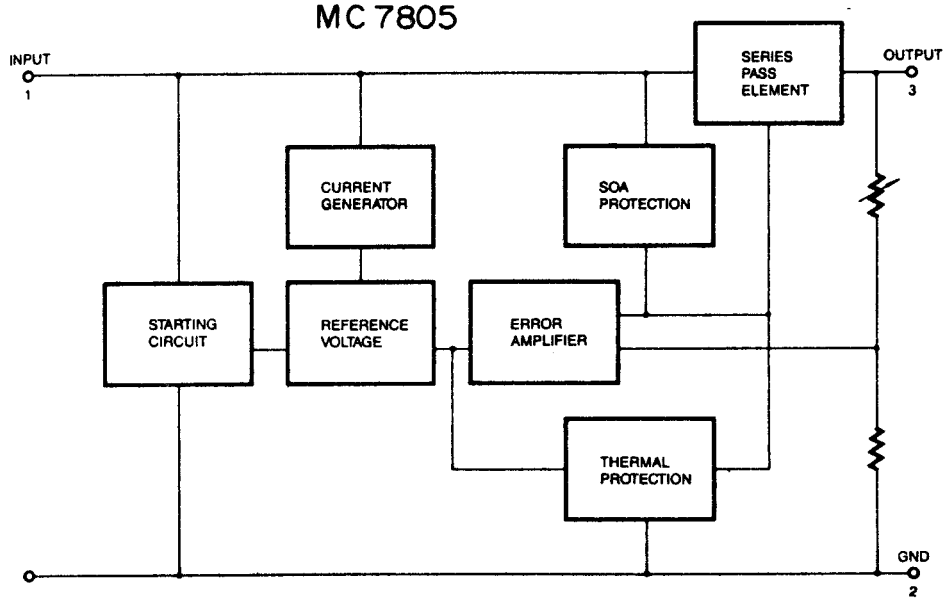

AN7812R

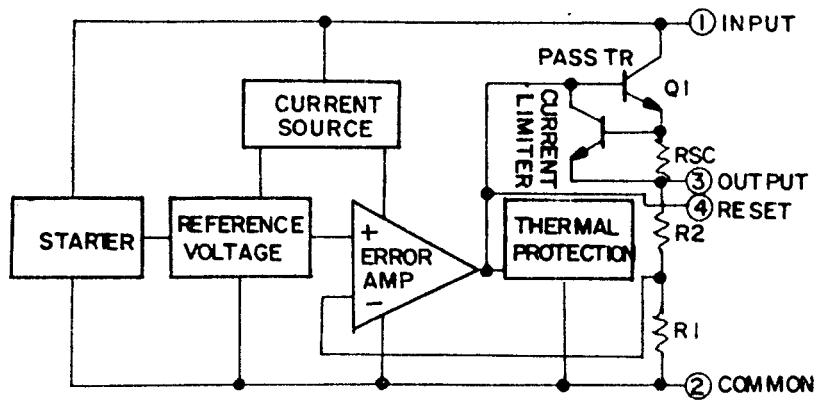

NJU3715L

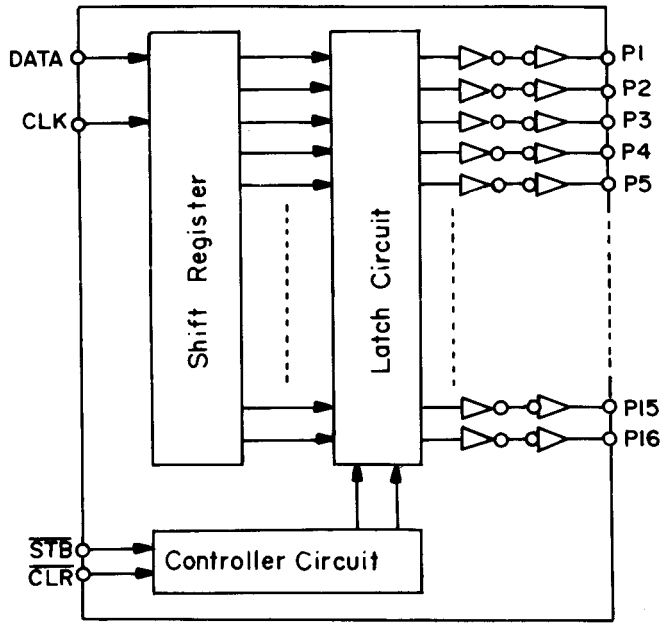

UPC 1330HA

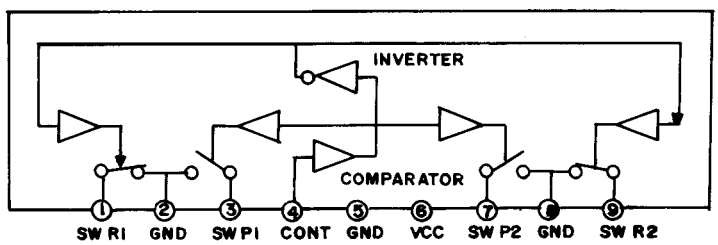

KIA7042P

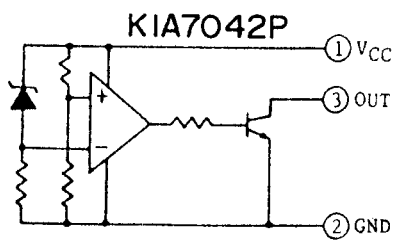

KIA4559P
KIA4559F

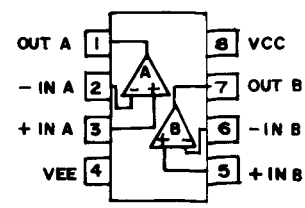

IC VOLTAGE CHECK LIST (RC-330G6)

IC504 (NASU7210)

PIN	1	2	3	4	5	6	7	8	9	10	11	12	13	14	15	16	17	18	19	20
VOL	2.6	2.6	2.6	2.6	2.6	2.6	5.1	5.1	3.39	1.78	0	5.0	0	0	5.0	0	5.0	3.4	0	5.0
PIN	21	22	23	24	25	26	27	28	29	30	31	32	33	34	35	36	37	38	39	40
VOL	5.0	4.9	5.0	5.0	4.3	4.3	4.3	4.3	4.3	4.3	4.3	3.3	0.5	5.0	2.8	5.0	1.23	1.7	4.23	0
PIN	41	42	43	44	45	46	47	48	49	50	51	52	53	54	55	56	57	58	59	60
VOL	0	0	0	0	5.0	2.5	2.7	1.9	2.54	2.56	2.56	2.56	2.56	2.56	2.56	2.56	2.56	2.56	2.56	2.56
PIN	61	62	63	64	65	66	67	68	69	70	71	72	73	74	75	76	77	78	79	80
VOL	2.56	2.56	2.56	2.56	2.56	2.56	2.56	2.56	2.56	2.56	2.56	2.56	2.56	2.56	2.56	2.56	2.56	2.56	2.56	2.56

IC505 (KIA7042P)

PIN	1	2	3
VOL	5.1	0	5.1

IC601 (MC7805)

PIN	1	2	3
VOL	20	0	5.1

IC602 (AN7812R)

PIN	1	2	3	4
VOL	21.3	0	12.0	13.3

IC603 (AN7812R)

PIN	1	2	3	4
VOL	21.3	0	11.95	13.2

IC701 (KIA4559P)

PIN	1	2	3	4	5	6	7	8
VOL	5.73	5.73	5.6	0	5.7	5.7	5.7	11.5

IC901 (BA6138)

PIN	1	2	3	4	5	6	7	8	9
VOL	-0.7	0	0.6	2.0	0	2.0	0.6	0	12

IC902 (BA10393N)

PIN	1	2	3	4	5	6	7	8
VOL	0	0	0	0	0	0	0	5.1

IC101 (TA7705P)

PIN	1	2	3	4	5	6	7	8	9	10	11	12	13	14	15	16
VOL	11.3	2.7	4.3	2.65	2.95	2.95	2.94	0	2.95	0	2.93	2.95	2.93	2.66	3.7	2.73

IC102 (UPC1330HA)

PIN	1	2	3	4	5	6	7	8	9
VOL	0	0	0	10.9	0	12	0	0	0

IC151 (KIA4559S)

PIN	1	2	3	4	5	6	7	8	9
VOL	11.6	6.0	6.0	5.8	0	5.8	6.0	6.0	11.6

IC201 (CXA1331S)

PIN	1	2	3	4	5	6	7	8	9	10	11	12	13	14	15	16	17	18	19	20
VOL	5.75	5.75	5.78	5.78	0	5.7	5.7	5.7	5.7	5.78	0.4	0.4	5.74	0	0	11.4	5.78	5.74	0.4	0.4
PIN	21	22	23	24	25	26	27	28	29	30	31	32	33	34	35	36	37	38	39	40
VOL	5.78	5.7	5.7	5.74	5.7	1.3	5.78	5.78	5.75	5.75										

IC431 (UPC1297CA)

PIN	1	2	3	4	5	6	7	8	9	10	11	12	13	14	15	16	17	18
VOL	4.4	0	4.4	0.64	0	0	0	0	0	1.65	0	0	0	0	0.6	4.4	0	12

IC501 (LB1641)

PIN	1	2	3	4	5	6	7	8	9	10
VOL	0	0.6	0.76	6.2	0	0	0	11.95	0.77	0.6

IC502 (LB1641)

PIN	1	2	3	4	5	6	7	8	9	10
VOL	0	0.6	0.76	6.25	0	0	0	11.95	0.77	0

IC503 (NJU3715L)

PIN	1	2	3	4	5	6	7	8	9	10	11	12	13	14	15	16	17	18	19	20
VOL	0	0	0	0	0	0	0	0	0	0	0	3.3	0.5	5.1	5.1	5.0	0	0	0	0
PIN	21	22	23	24	25	26	27	28	29	30	31	32	33	34	35	36	37	38	39	40
VOL	0	5.1																		

TUNER RH330T6

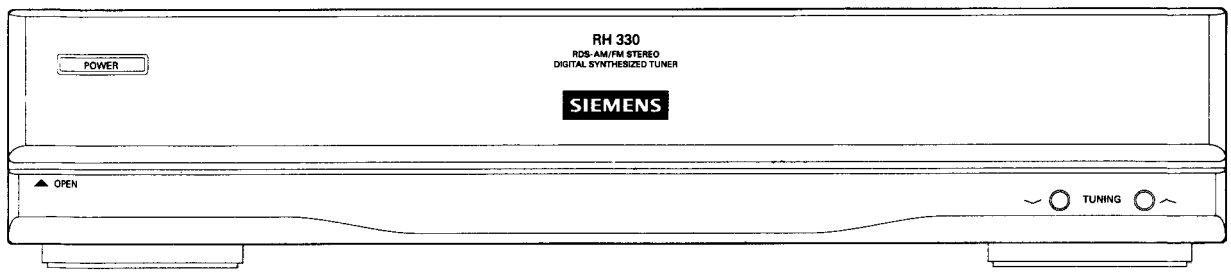

GENERAL TECHNICAL DATA

T U N E R

Power supply : 230V / 50Hz
Ranges : FM 87.5...108MHz
MW 522 ...1620KHz
LW 153 ...281KHz

Tuning steps : FM 50KHz
MW 9KHz
LW 1KHz

Intermediate : FM 10.7 +/- 0.1MHz
frequencies : AM 450KHz

Sensitivity : FM <3uV(30dB, 40KHz)
MW <700uV/m (57dB)
LW <1000uV/m (60dB)

Selectivity : FM >60dB (+/-300KHz)
MW >25dB (+/-10KHz)

IF-Rejection : FM > 90dB (90MHz)
MW > 40dB (600KHz)
LW > 40dB (255KHz)

AM-Suppression : FM > 50dB
Image
rejection : FM > 70dB (106MHz)
MW > 32dB (1404KHz)
LW > 25dB (255KHz)

Signal-to-
noise ratio : FM > 63dB
MW > 40dB

Distortion : FM < 0.3%
MW < 1%

Frequency : FM< 30Hz...>14KHz

BLOCK DIAGRAM (RH330T6)

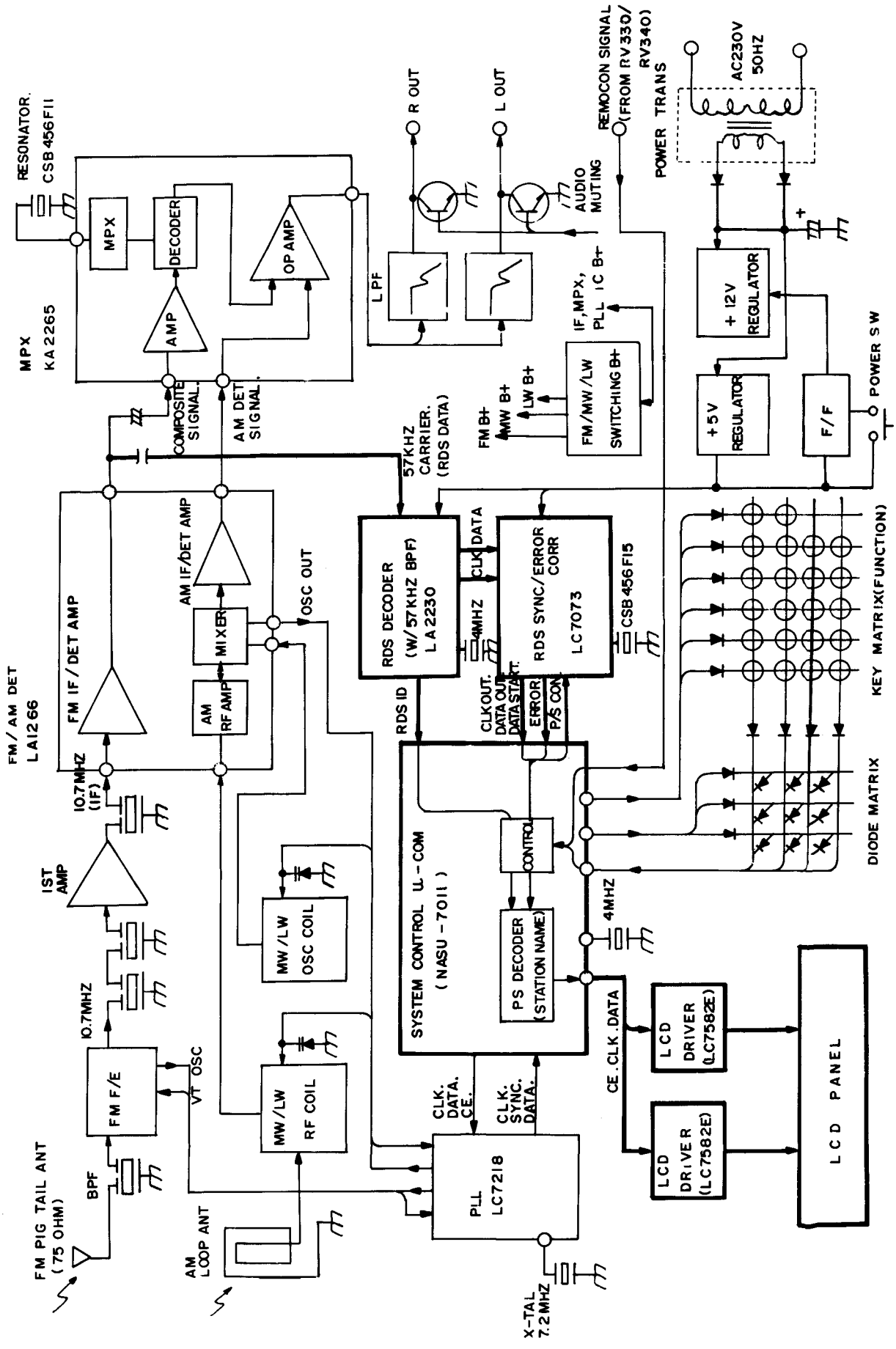

SCHEMATIC DIAGRAM (RH330T6)

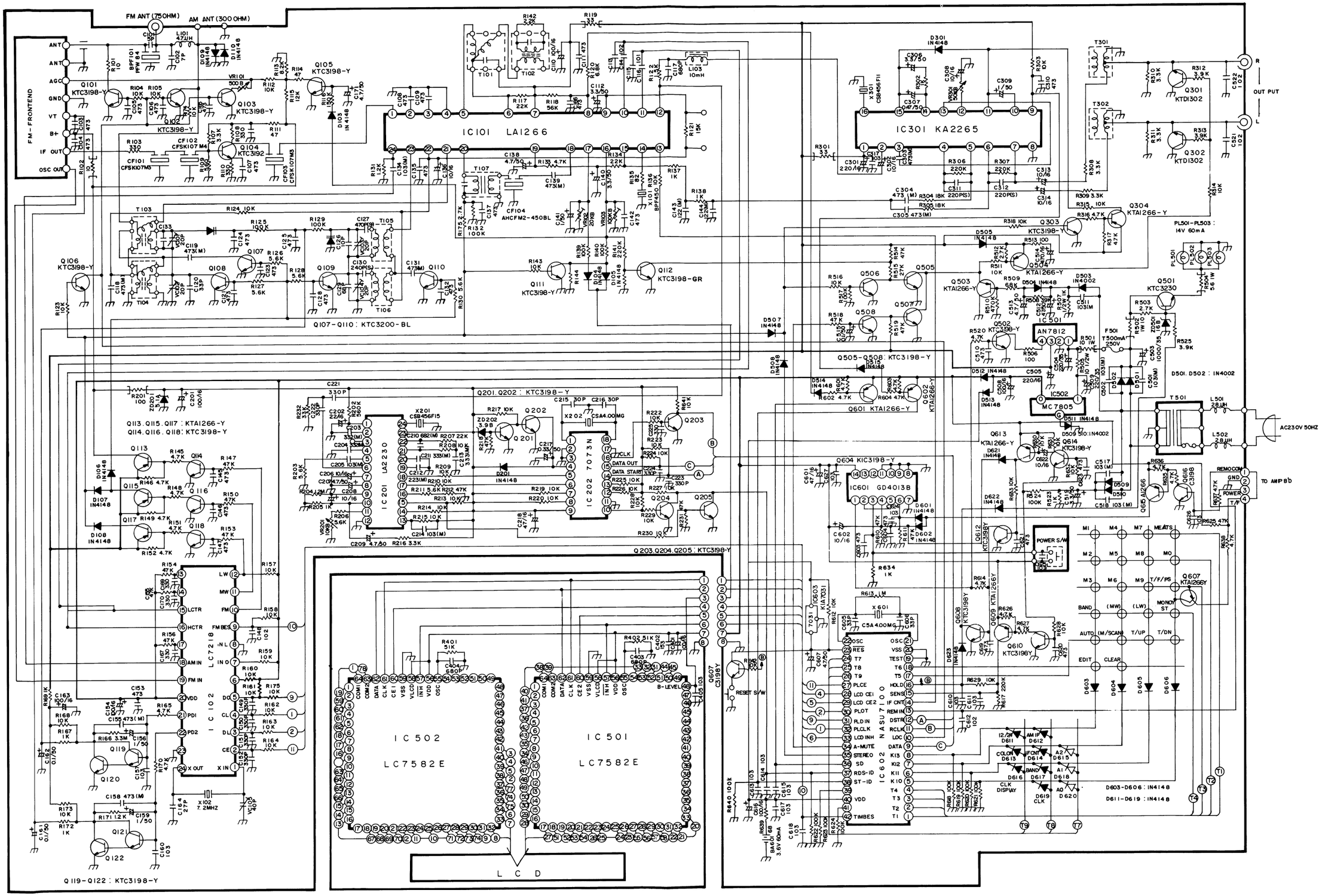

P.C.B. LAYOUT (RH330T6)

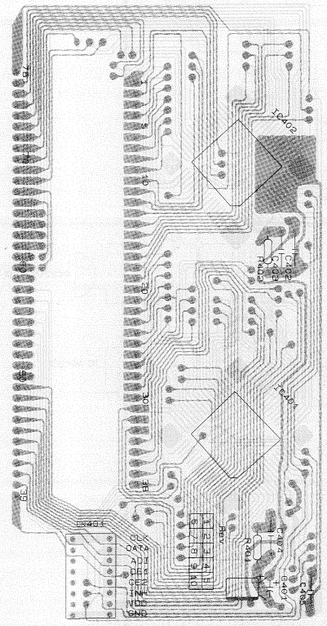

MAIN P.C. BOARD (RH330TG)

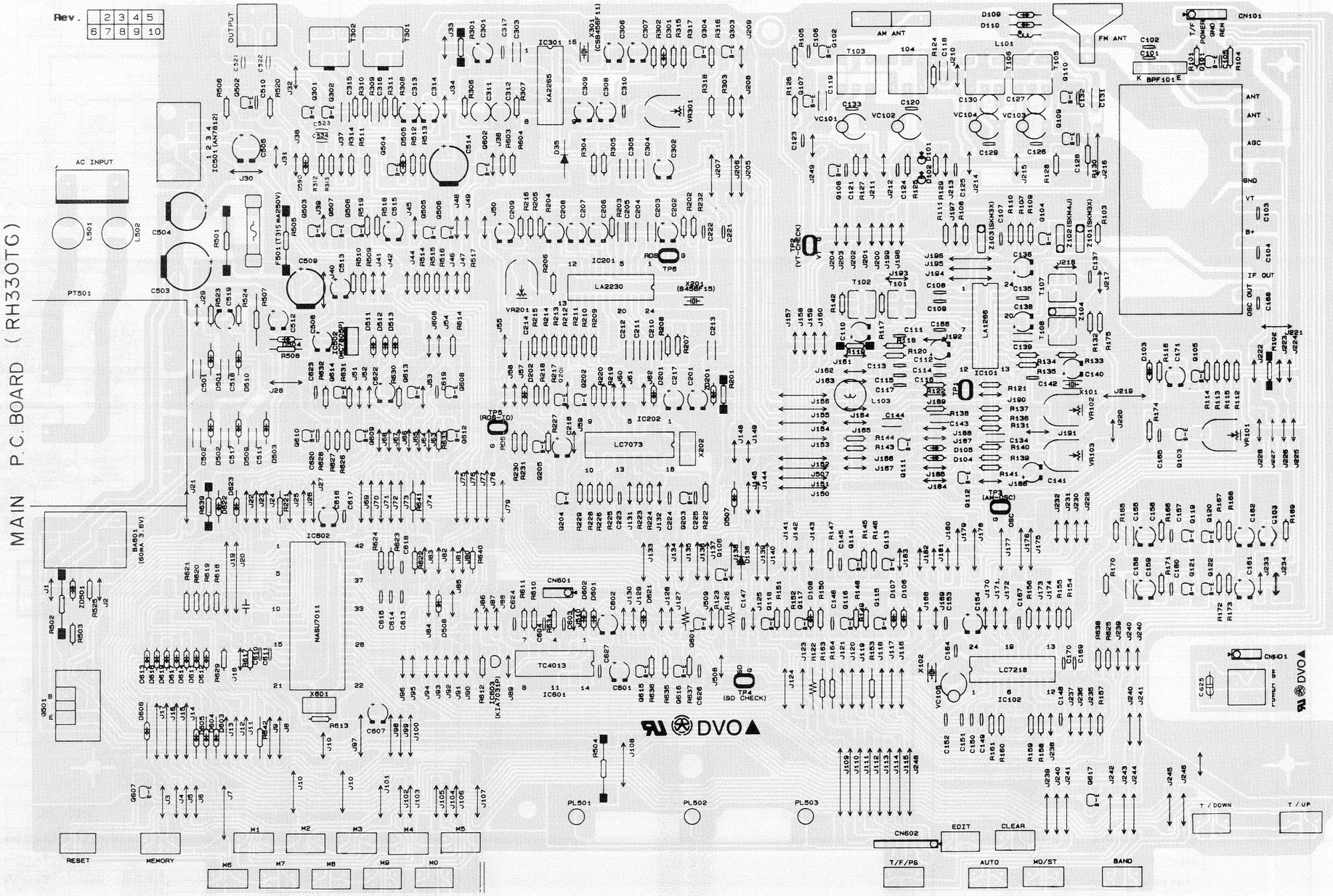

P.C.B. LAYOUT (RH330T6)

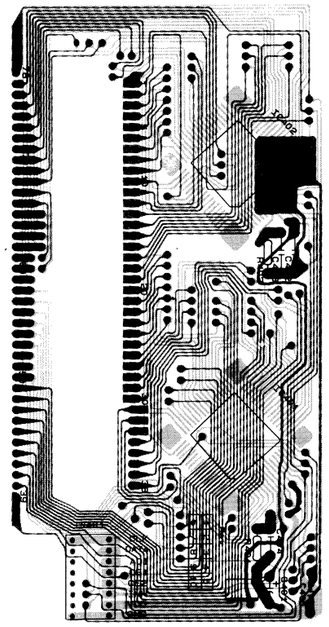

MAIN P.C. BOARD (RH330TG)

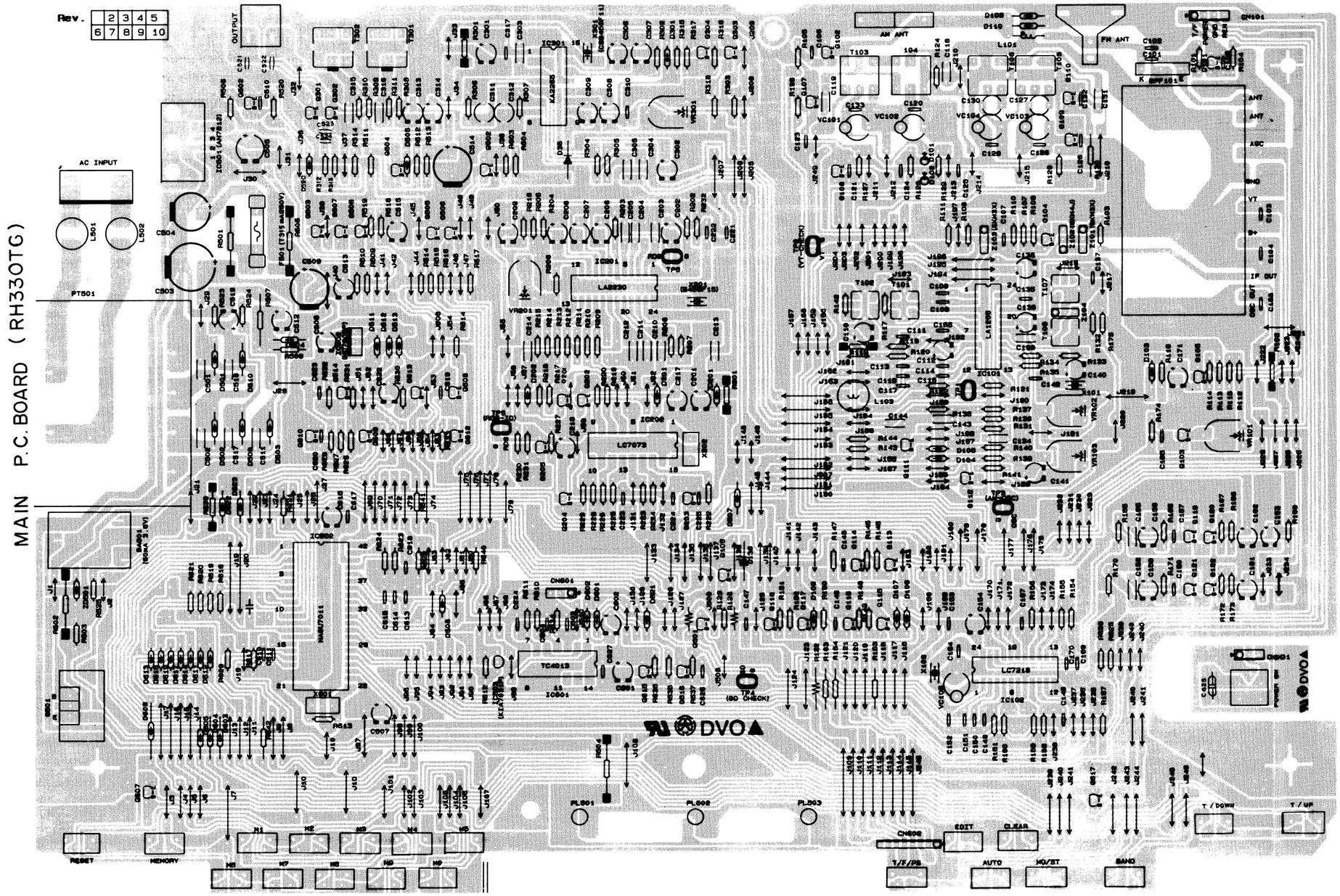

EXPLODED VIEW (RH330T6)

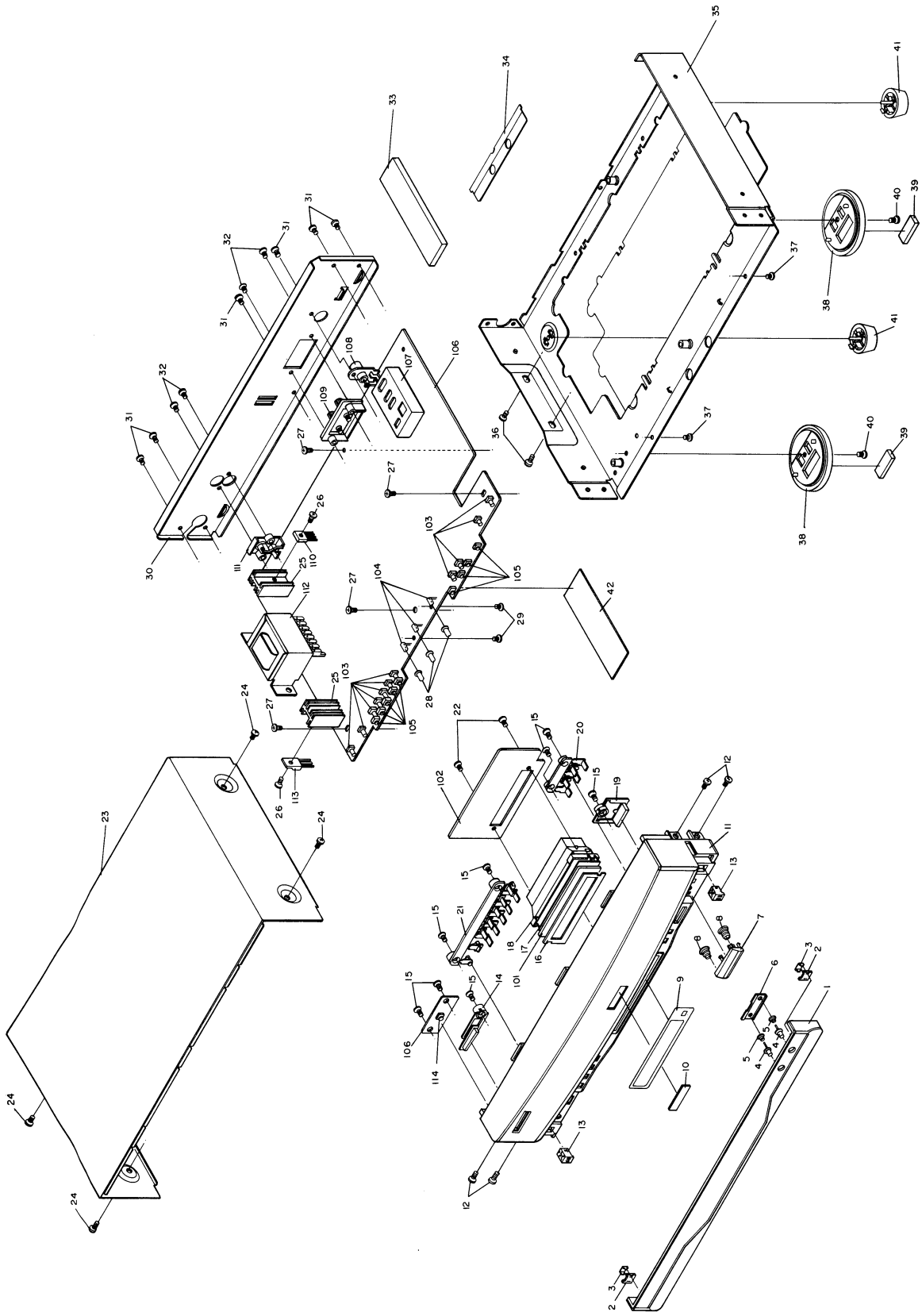

WIRING DIAGRAM (RH330T6)

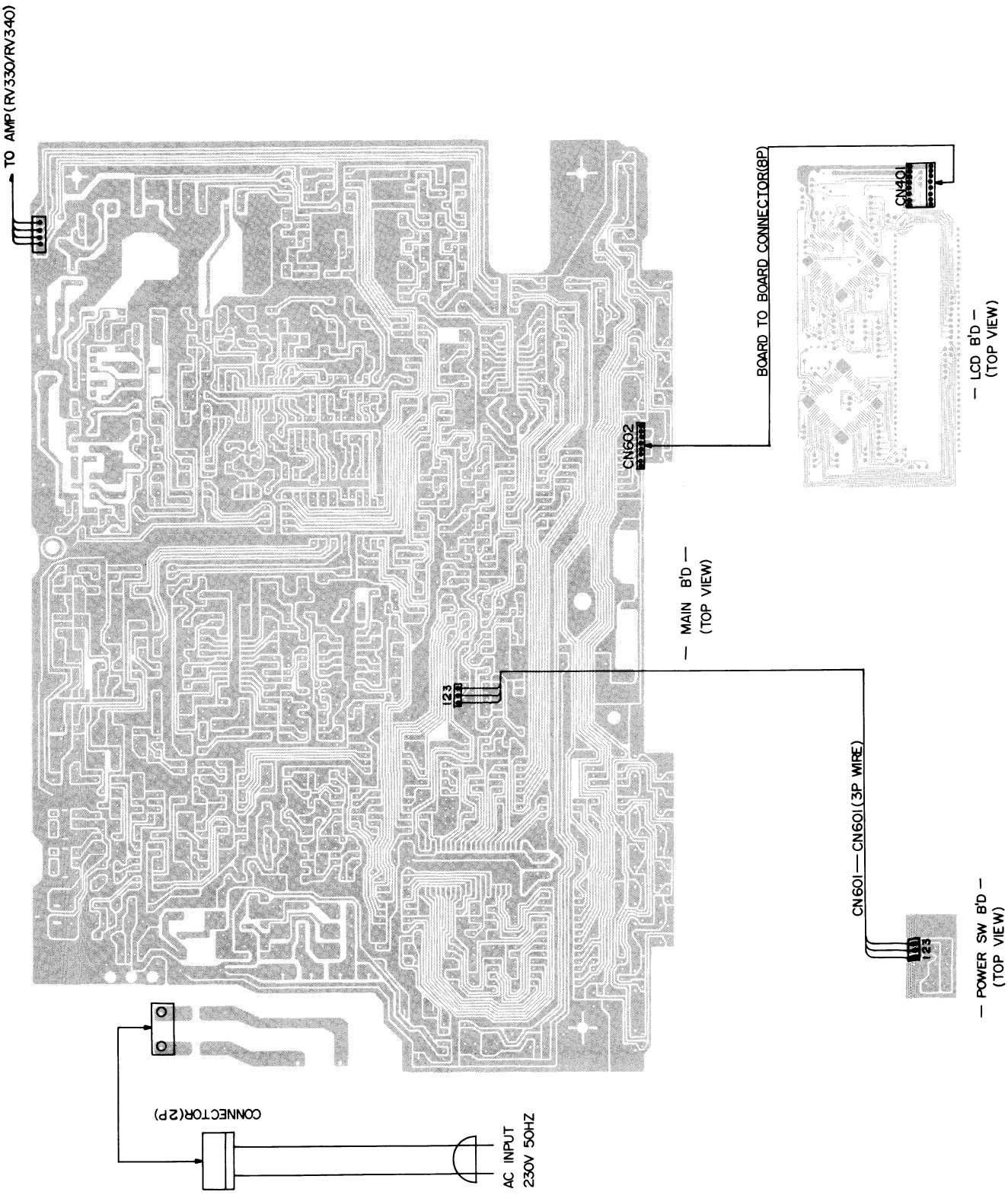

TUNER ALIGNMENT RH330T6
=======================

Step	Function	Preparation	Singal input	Adjusting element	Indicated value
1.	UKW -Discriminator	Connect RF-generator(75ohm) to antenna socket. Connect voltmeter(10M) to TP1 connect distortion-meter across speakers. Set RH330T6-display to 98MHz.	98MHz/40KHz 1KHz/1uV	T101 T102	<20mV <0.5%(K3)
2.	FM-Muting level	Set RH330T6-display to 98MHz. Switch mono switch to off.	98MHz/40KHz /1KHz/7.1uV	VR103	Muting off
3.	FM-RDS Sens	Connect RDS-generator to antenna socket. Connect voltmeter to TP5. Set RH330T6-display to 98MHz.	98MHz/40KHz 1KHz/20uV	VR201	Max. High-Level (5V)
4.	AM-ZF (MW)	Connect RF-generator to antenna socket. Set RH330T6-display to 531KHz.	450KHz/30% /400Hz	T107	Max. 400Hz-Level
5.	MW-Corner-frequencies	Set RH330T6-display to 531KHz. Set digitalvoltmeter(10M) to TP2.		T105	0.9V
6.	MW-Corner-frequencies	Set RH330T6-display to 1620KHz. Set digitalvoltmeter(10M) to TP2.		VC103	8.0V
7.	Repeat step 4 and 5 again				
8.	MW-Tracking repeat adjus-tment several times	Set RH330T6-display to 603KHz. Set RH330T6-display to 1404KHz	603KHz/30% /400Hz 1404KHz/30% /400Hz	T103 VC101	Max. 400Hz-Level Max. 400Hz-Level
9.	Lw-Corner-frequencies	Set RH330T6-display to 153KHz. Set digitalvoltmeter(10M) to TP2.		T106	0.8V
10.	LW-Corner-frequencies	Set RH330T6-display to 281KHz. Set digitalvoltmeter(10M) to TP2.		VC104	5.7V
11.	Repeat step 8 and 9 again.				
12.	LW-Tracking Repeat adjus-tment several times	Set RH330T6-display to 153KHz. Set RH330T6-display to 281KHz.	153KHz/30% /400Hz 281KHz/30% /400Hz	T104 VC102	Max. 400Hz-Level Max. 400Hz-Level

LOCATION / ALIGNMENT POINTS

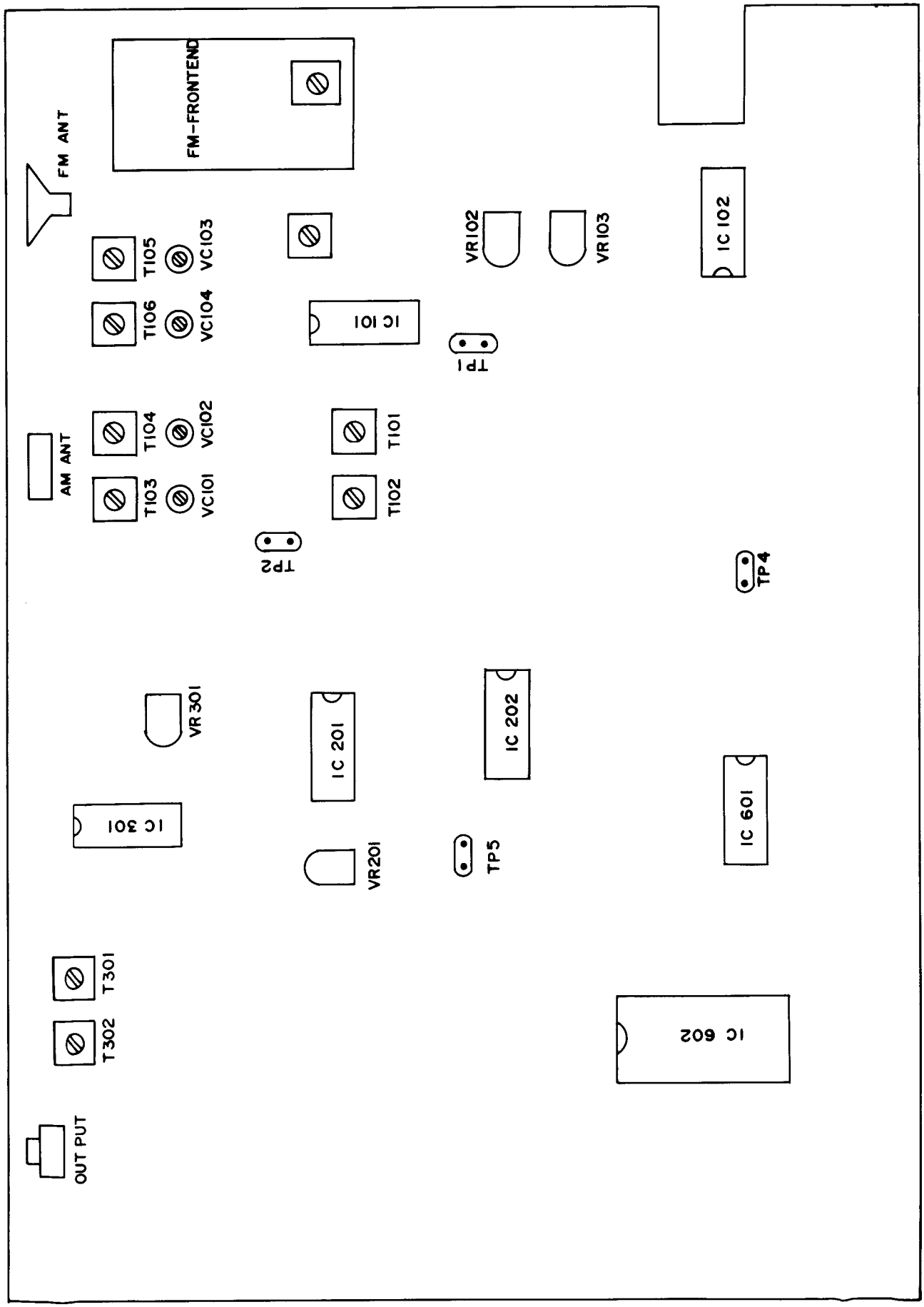

IC BLOCK DIAGRAM (RH330T6)

K A 2 2 6 5

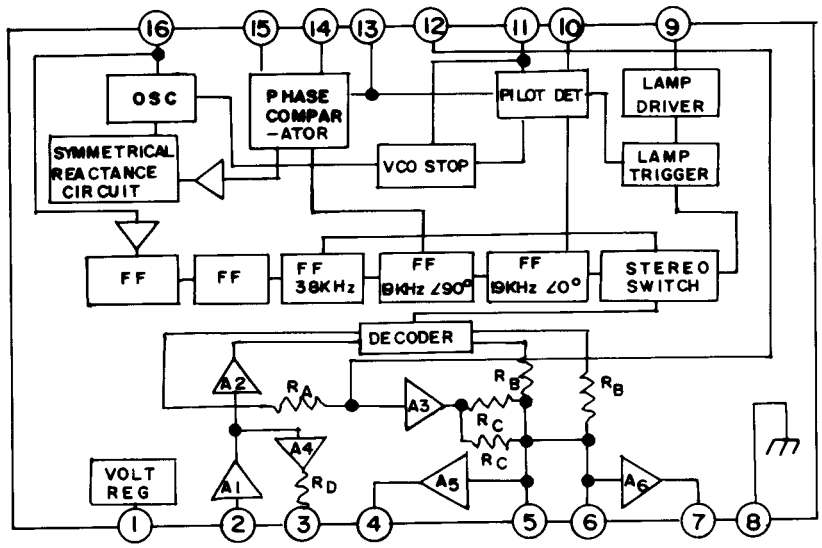

L A 1 2 6 6

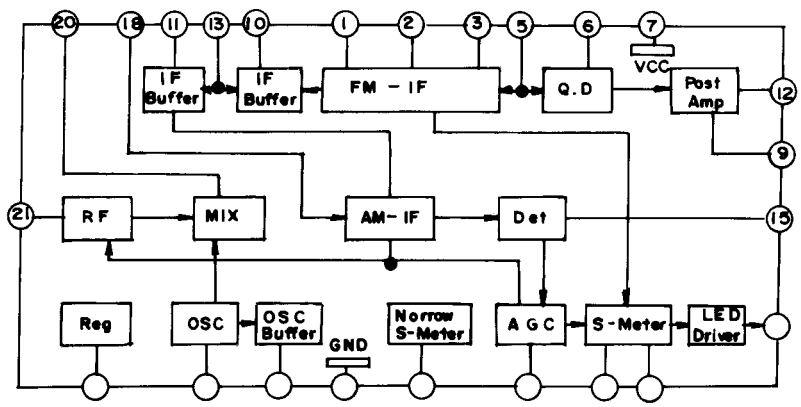

LC7073

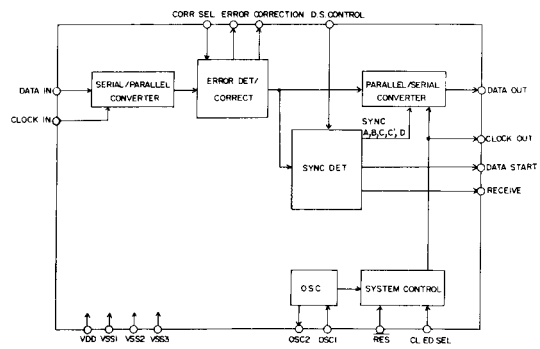

LC66308A

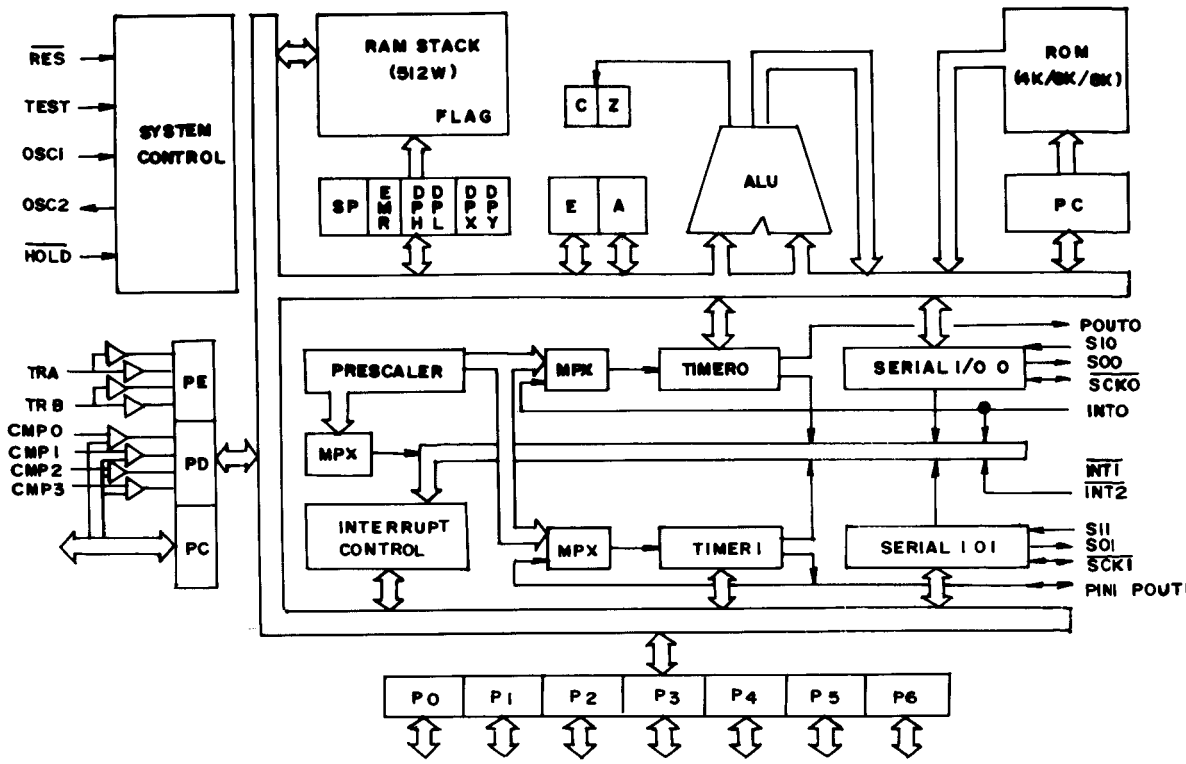

LC7582E

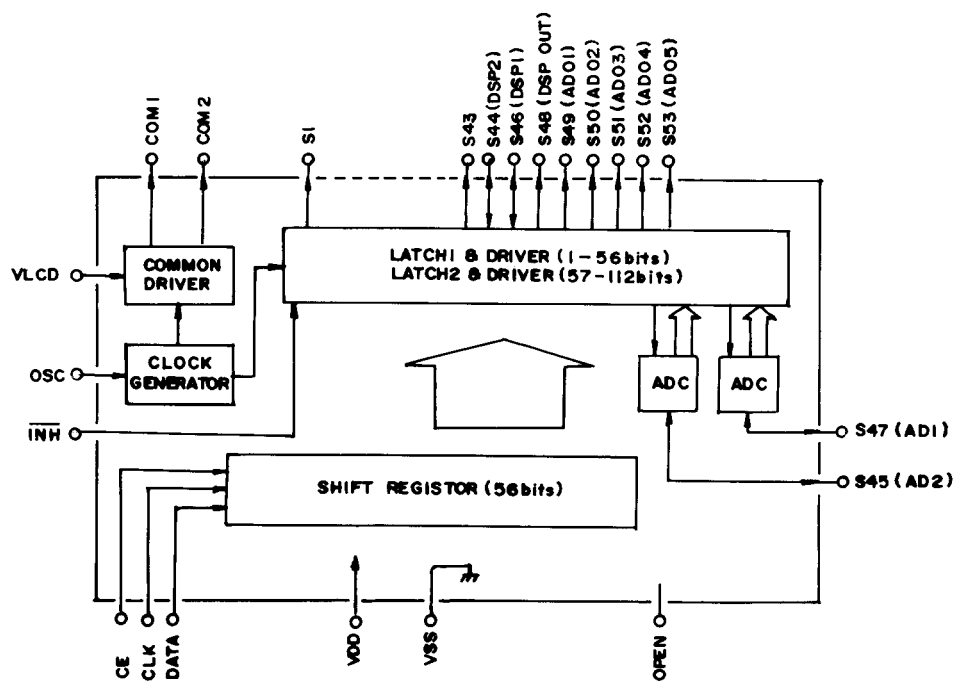

LC7218

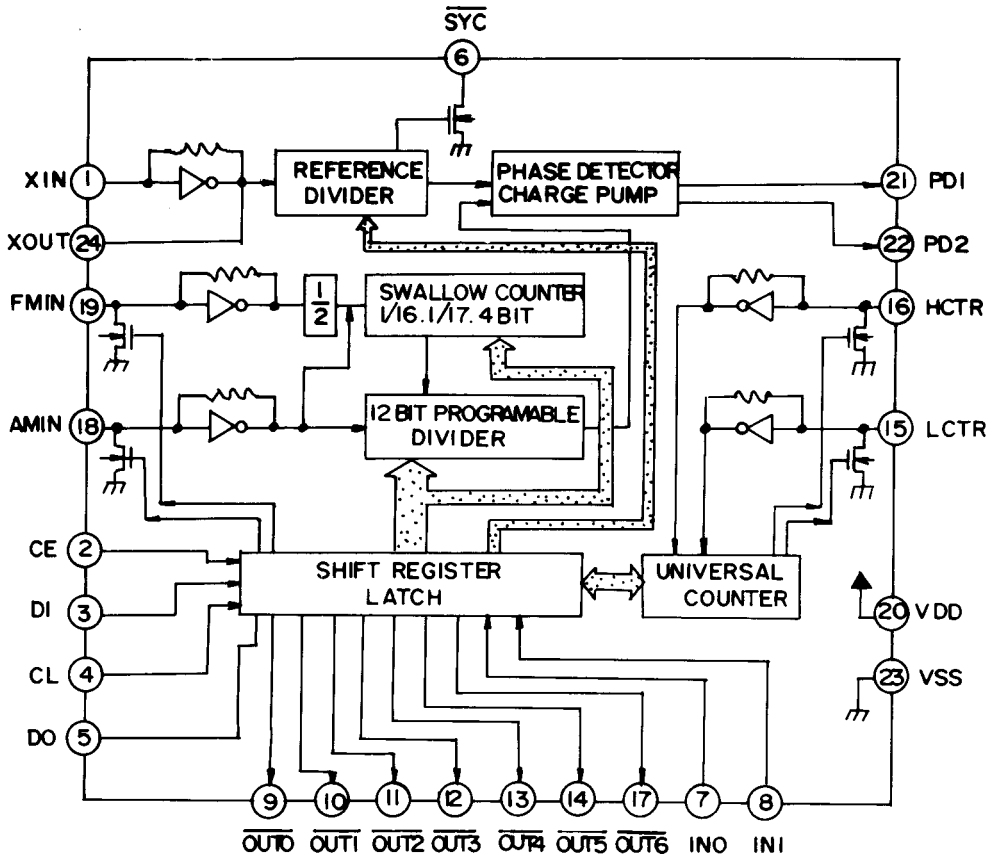

LA2230

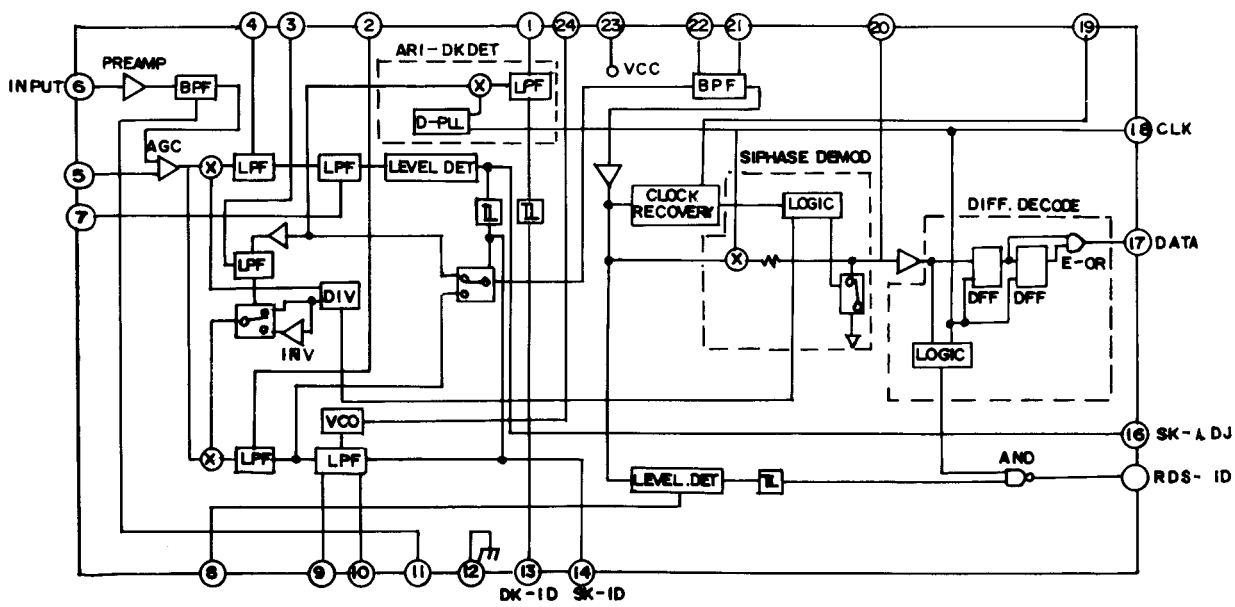

AN7812R

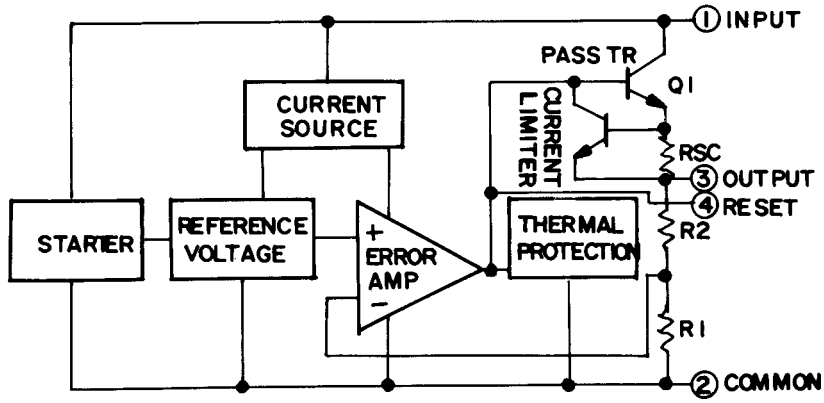

TC4013PB/ NJU4013B

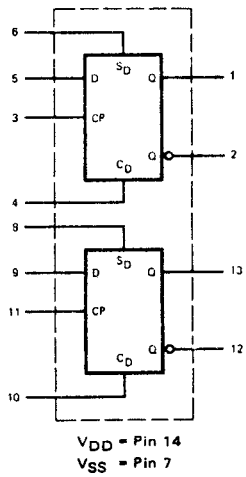

KIA7031P

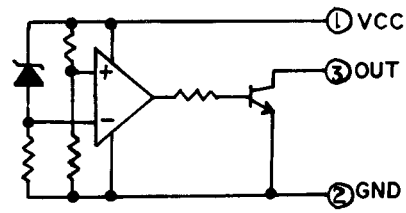

MC7805/MC7815

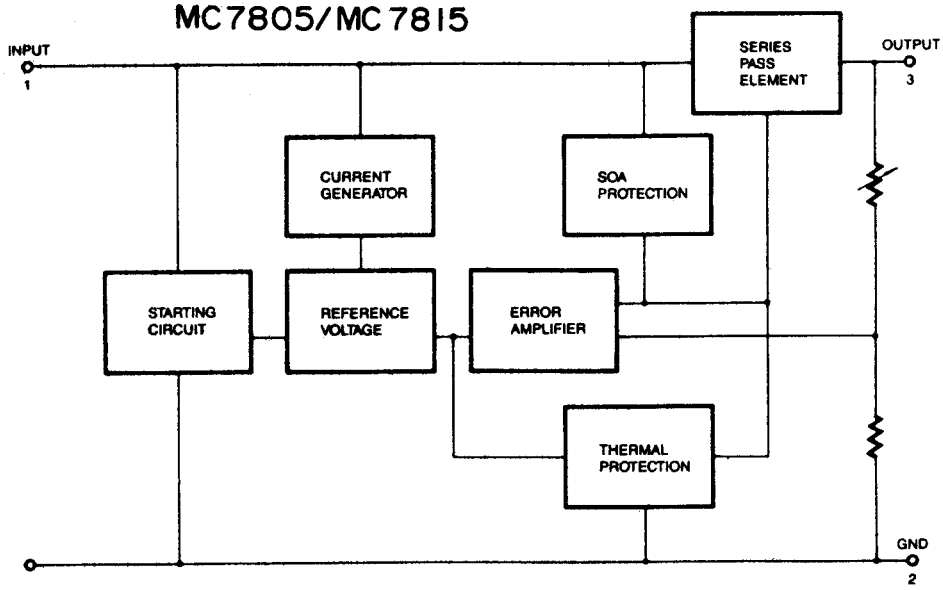

IC VOLTAGE CHECK LIST (RH-330T6)

IC101 (LA1266)

MODE	1	2	3	4	5	6	7	8	9	10	11	12	13	14	15	16	17	18	19	20
FM	2.5	2.5	2.5	0	11.1	11.1	11.1	0	3.8	2.4	2.8	3.2	0	1.4	1.5	1.4	0	2.5	1.5	0
MW/LW	1.1	1.1	1.1	0	11.3	11.3	11.3	0	3.8	2.4	2.2	3.1	0	1.4	1.8	2.4	3.1	1.1	1.9	10
MODE	21	22	23	24																
FM	4	4	4	2.6																
MW/LW	3.6	3.6	3.6	2.1																

IC102 (LC7218)

MODE	1	2	3	4	5	6	7	8	9	10	11	12	13	14	15	16	17	18	19	20
FM	2.2	0	0	0	4.3	0	5	0	1	5	0	0	0	0	0	0	0	0	2.5	5
MW	2.2	0	0	0	4.3	0	5	0	1	0	5	0	0	0	0	0	0	2.5	0	5
LW	2.2	0	0	0	4.3	0	5	0	1	0	0	5	0	0	0	0	0	2.5	0	5
MODE	21	22	23	24																
FM	1.1	1.1	0	2.6																
MW	1.1	1.1	0	2.6																
LW	1.1	1.1	0	2.6																

IC201 (LA2230)

MODE	1	2	3	4	5	6	7	8	9	10	11	12	13	14	15	16	17	18	19	20
FM	1.5	1.4	0.5	1.4	2.3	2.4	2.8	0.7	1.4	0	0.7	0	5	5	2.7	0	2.5	2.4	2.4	1
MODE	21	22	23	24																
FM	2.1	2.1	5	3.3																

IC202 (LC7073)

MODE	1	2	3	4	5	6	7	8	9	10	11	12	13	14	15	16	17	18
FM	2	0	0	4.8	2.4	2.5	5	5	5	5	0	5	5	5	5	0	0	2.2

IC301 (KA2265)

MODE	1	2	3	4	5	6	7	8	9	10	11	12	13	14	15	16
ALL	11.5	3.2	3.2	2.5	3.1	3.1	2.5	0	0.6	2.9	2.9	3.2	2.9	2.9	2.9	3.2

IC401,402 (LC7582E)

MODE	1	2	3	4	5	6	7	8	9	10	11	12	13	14	15	16	17	18	19	20
	2.5	2.5	2.5	2.5	2.5	2.5	2.5	2.5	2.5	2.5	2.5	2.5	2.5	2.5	2.5	2.5	2.5	2.5	2.5	2.5
	21	22	23	24	25	26	27	28	29	30	31	32	33	34	35	36	37	38	39	40
	2.5	2.5	2.5	2.5	2.5	2.5	2.5	2.5	2.5	2.5	2.5	2.5	2.5	2.5	2.5	2.5	2.5	2.5	2.5	2.5
ALL	41	42	43	44	45	46	47	48	49	50	51	52	53	54	55	56	57	58	59	60
	2.5	2.5	2.5	2.5	2.5	2.5	2.5	2.5	2.5	2.5	2.5	2.5	2.5	2.5	3.9	5	4.3	5	0	0
	61	62	63	64																
	0	0	2.5	2.5																

IC501 (AN7812)

MODE	1	2	3	4
ALL	21.5	0	12	13.3

IC502 (MC7805C)

MODE	1	2	3
ALL	21.3	0	5

IC601 (GD4013B)

MODE	1	2	3	4	5	6	7	8	9	10	11	12	13	14
ALL	0	5	12	13.3	5	0	0	0	0	0	0	0	5	5

IC602 (NASU7011)

MODE	1	2	3	4	5	6	7	8	9	10	11	12	13	14	15	16	17	18	19	20
	4.3	4.3	4.3	4.3	0	0	0	0	4.9	0	4.9	4.9	5	0	0	5.4	4.3	4.3	0	0
	21	22	23	24	25	26	27	28	29	30	31	32	33	34	35	36	37	38	39	40
ALL	2	2	4.3	0	0	0	0	0	0	0	4.3	0	4.3	2.8	0	4.4	0	4.4	0	4.3
	41	42																		
	0	0.8																		

IC603 (KIA7031P)

MODE	1	2	3
ALL	5	0	5

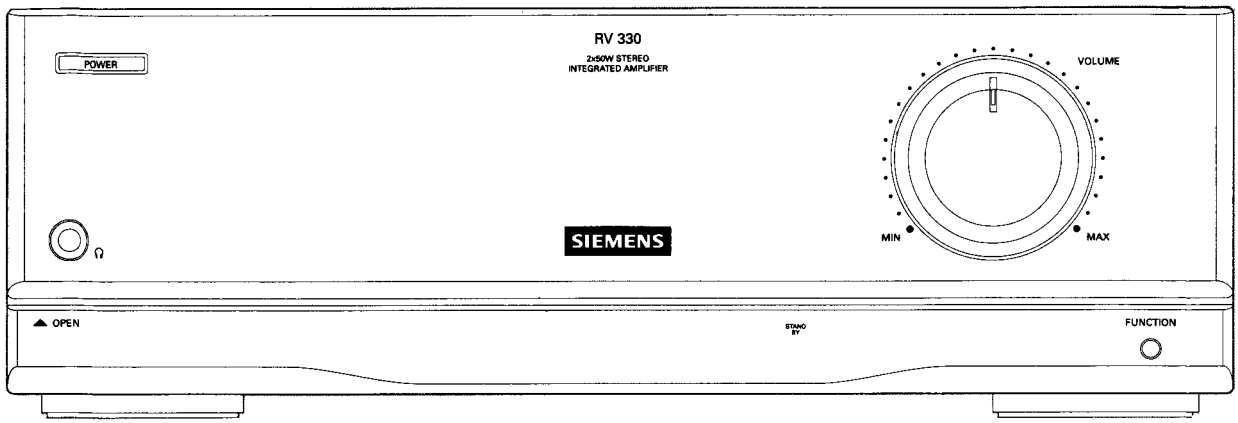

GENERAL TECHNICAL DATA

A M P L I F I E R

Power supply unit

Power supply : 230V / 50Hz
Power consumption : 200Wh
Fuse : 2.5A / 250V
6.3A / 250V X 2

Amplifier

Frequency Response (-3dB)	:	30Hz - 30K
Distortion at 50W	:	0.5%
S/N	:	Phono 60dB
		Aux 80dB
		CD 80dB

BLOCK DIAGRAM (RV330R6)

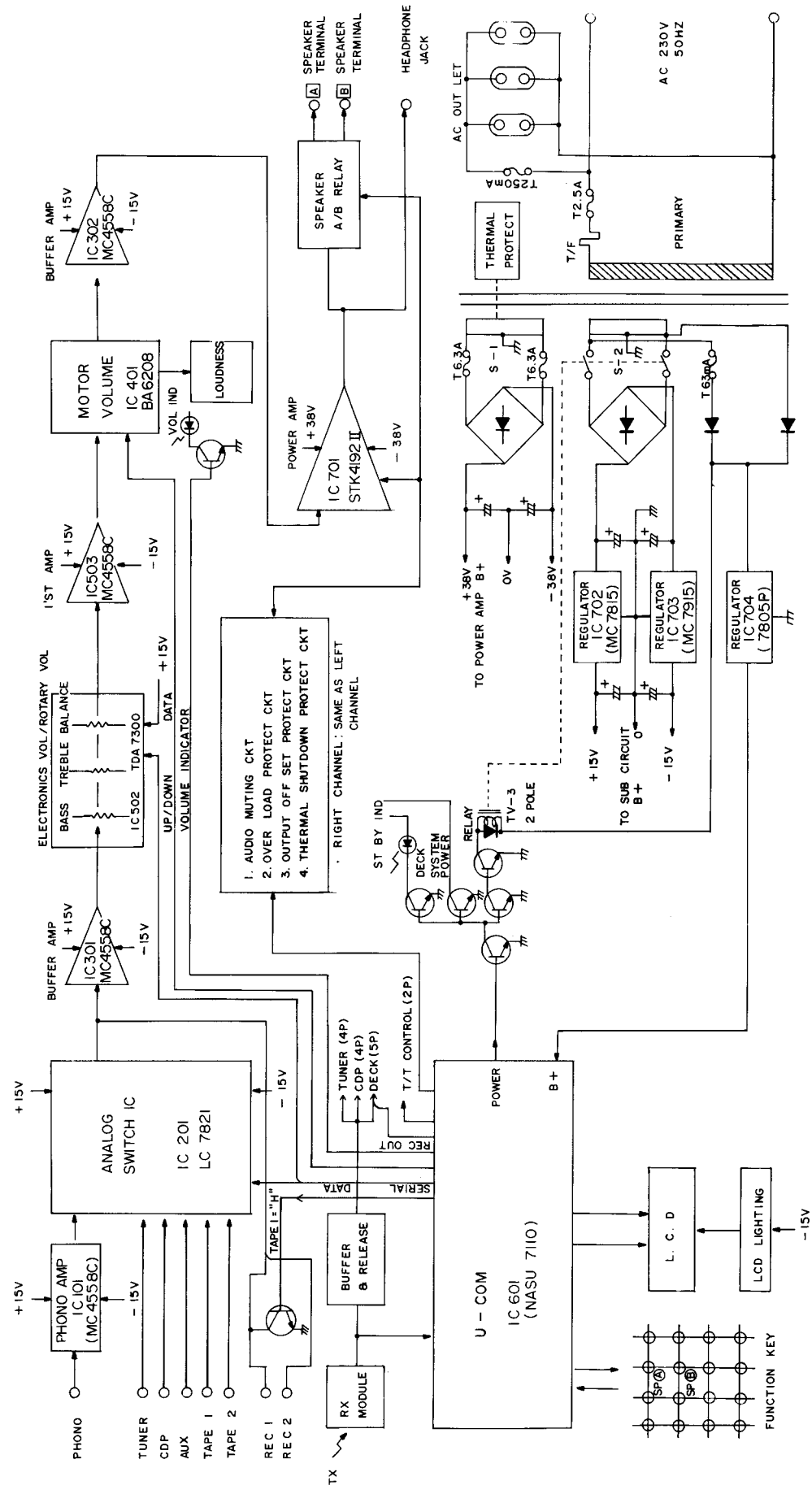

SCHEMATIC DIAGRAM (RV330R6)

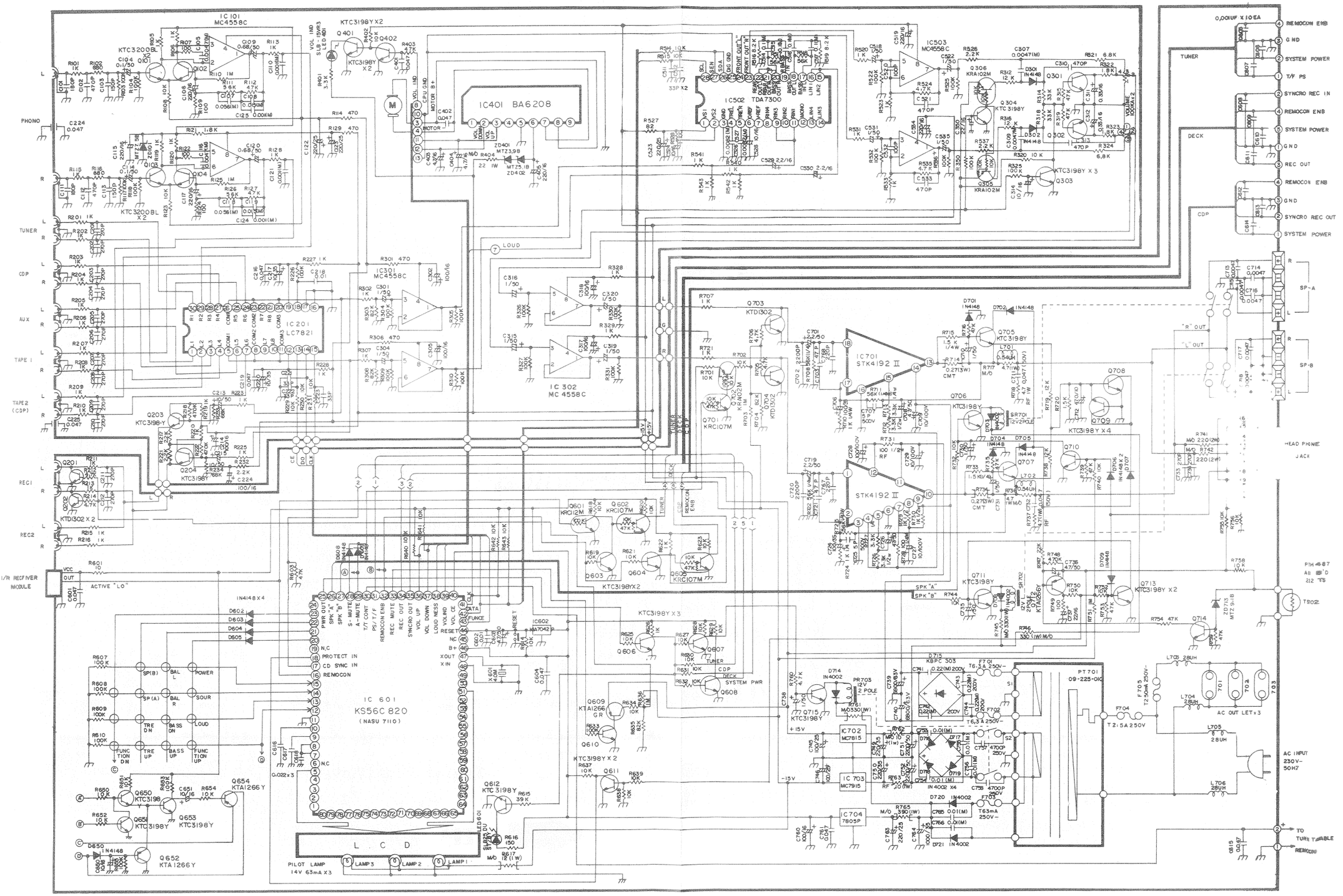

P.C.B. LAYOUT (RV330R6)

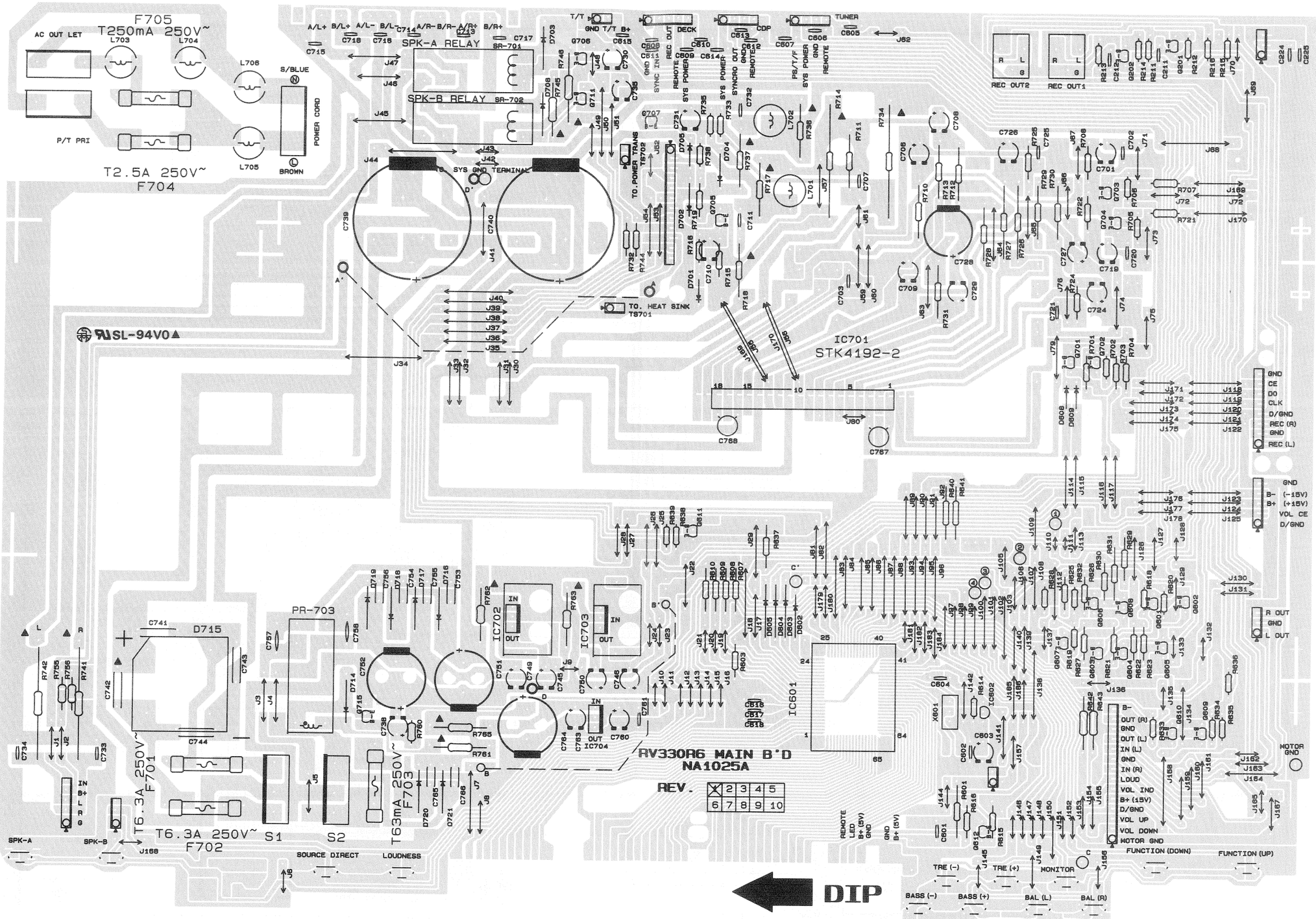

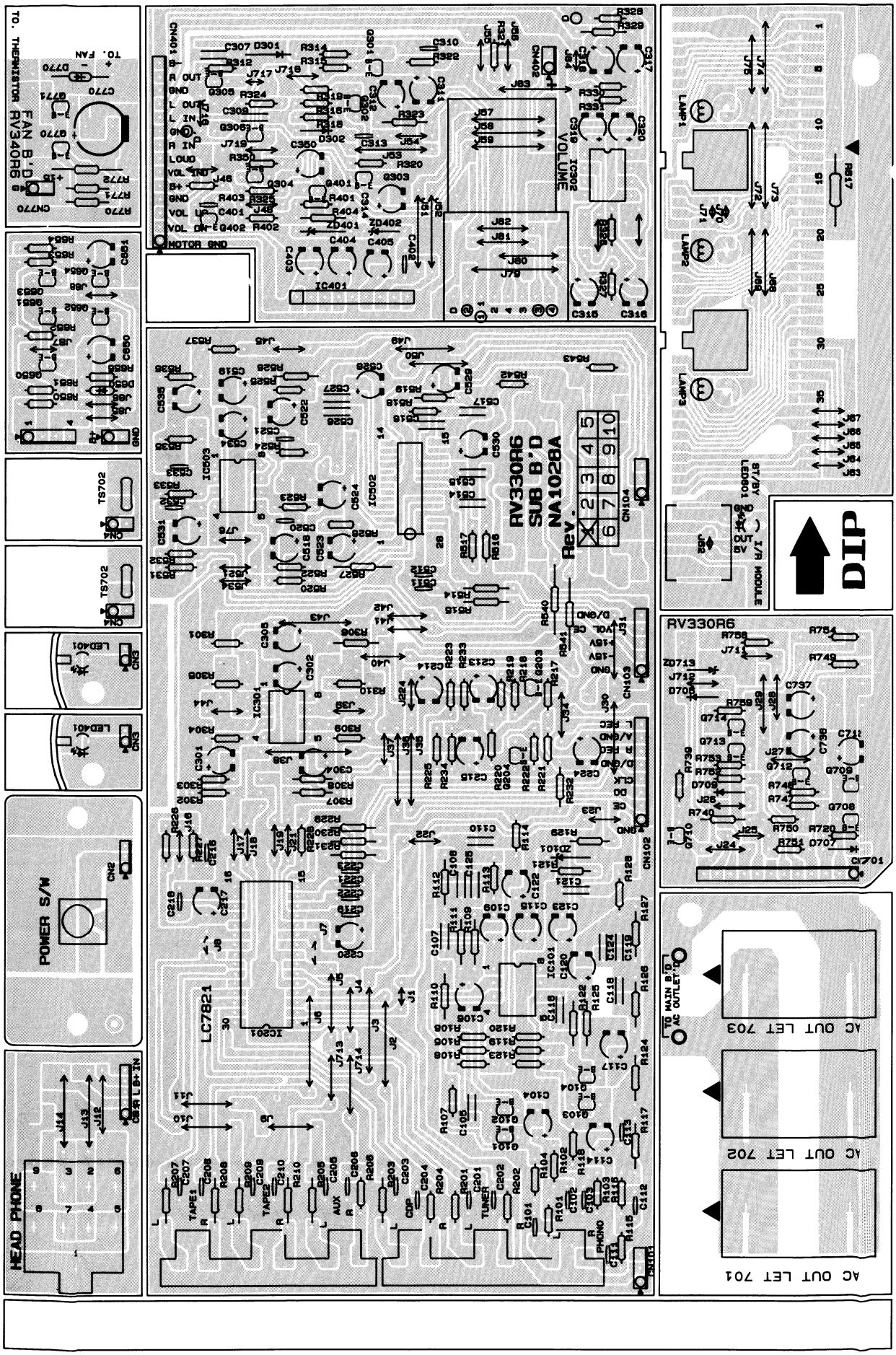
RV330R6
SUB B'D
NA1028A
Rev.
DIP
POWER S/W
HEAD PHONE
LC7821
FAN B'D
RV340R6
THERMISTOR
TO. FAN
AC OUT LET 701
AC OUT LET 702
AC OUT LET 703
TO MAIN B'D
AC OUTLET
VOLUME
I/R MODULE
TAPE1
TAPE2
AUX
CDP
TUNER
PHONO

EXPLODED VIEW (RV330R6)

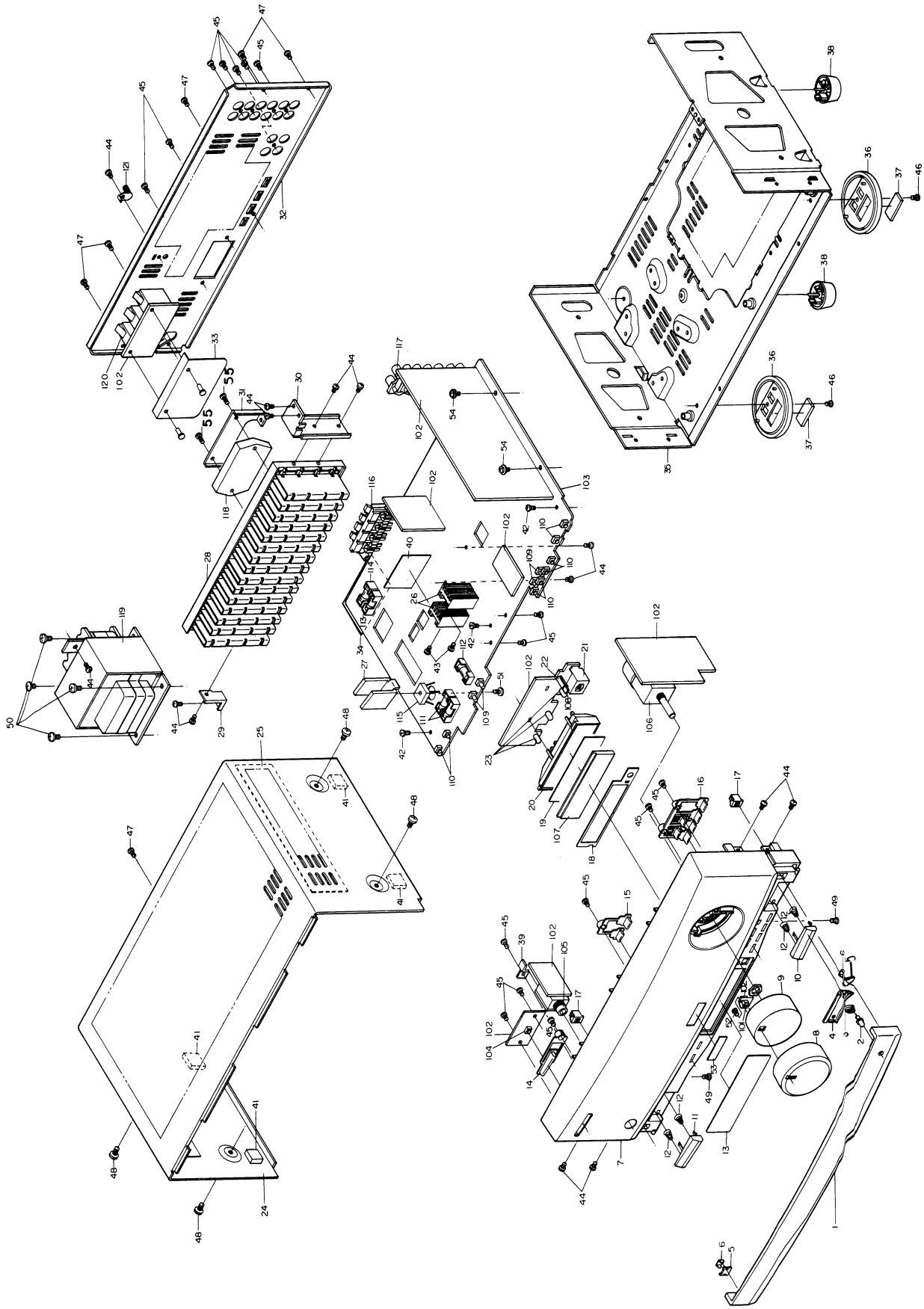

WIRING DIAGRAM (RV330R6)

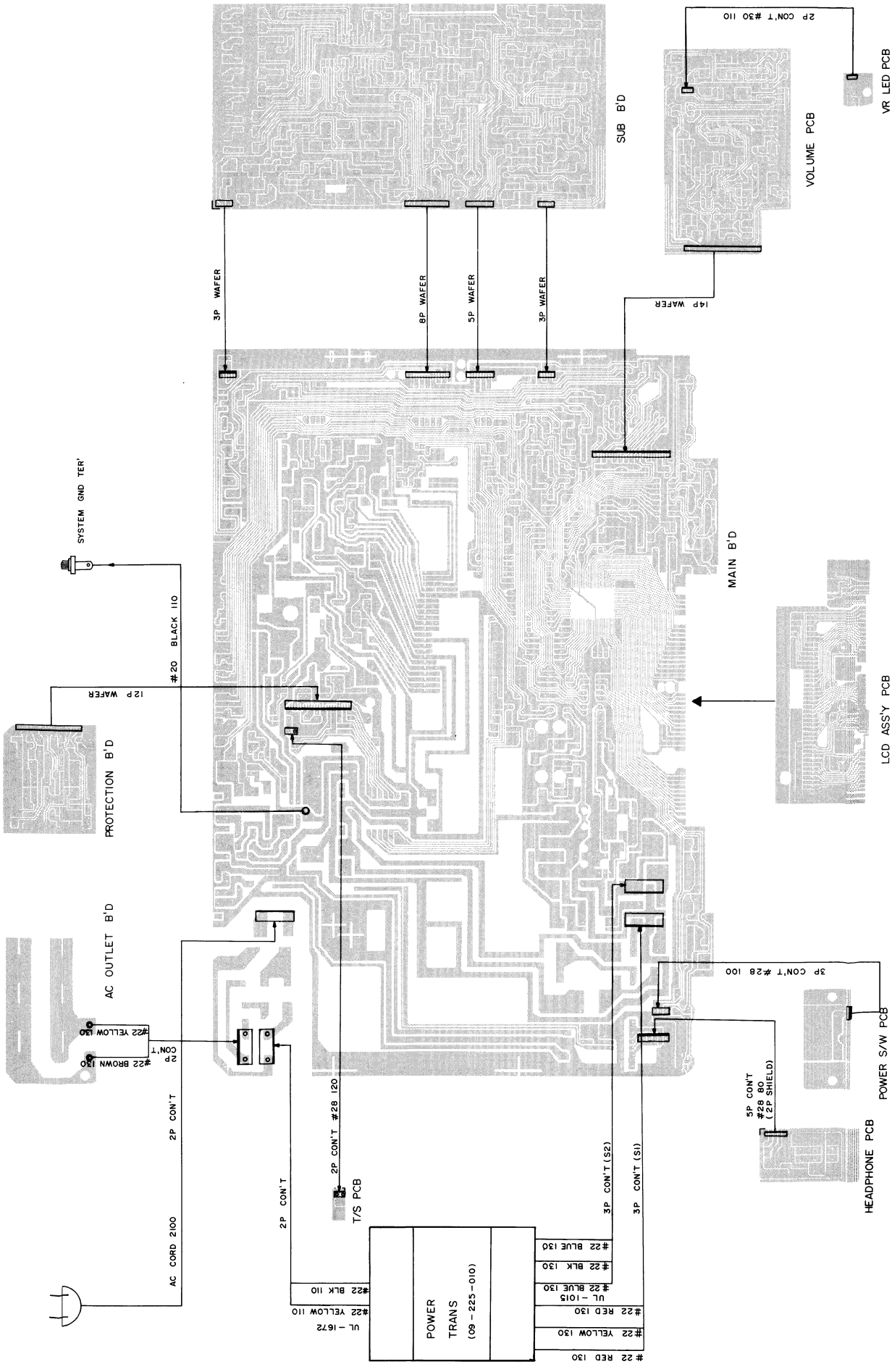

IC BLOCK DIAGRAM (RV330R6)

KS56C820

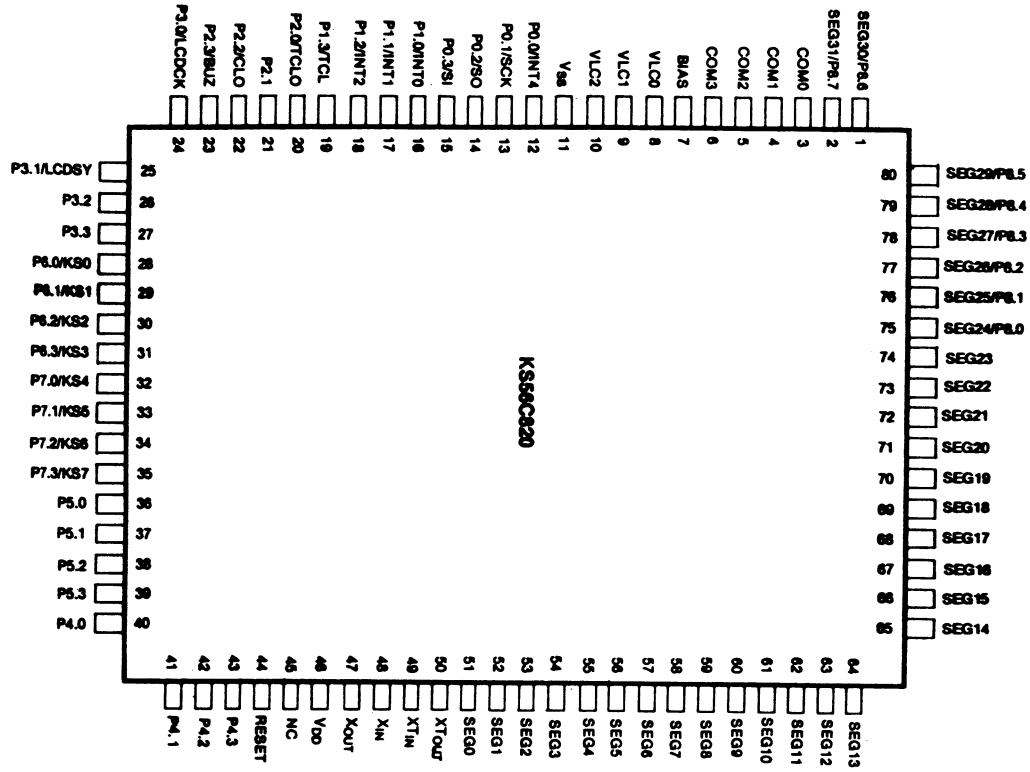

MC4558C

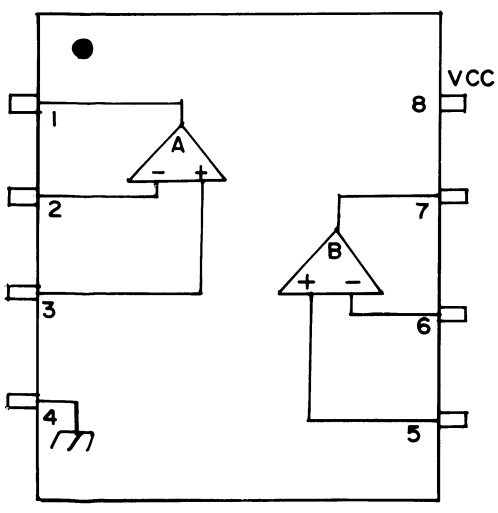

BA6208

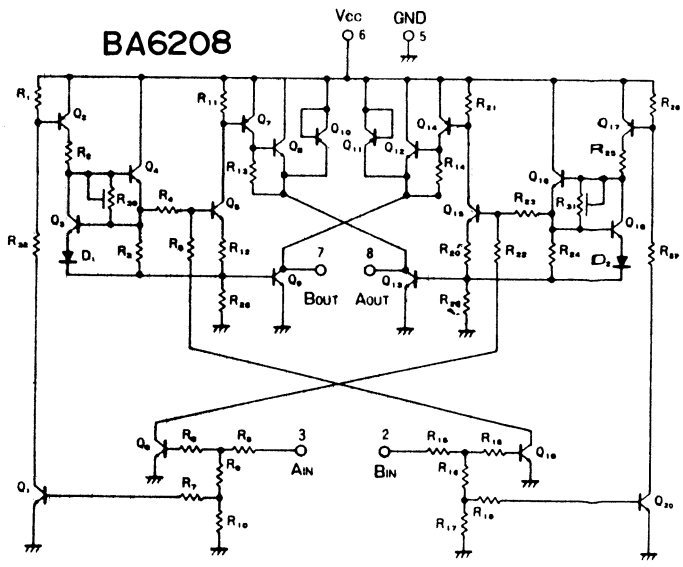

KIA7042P

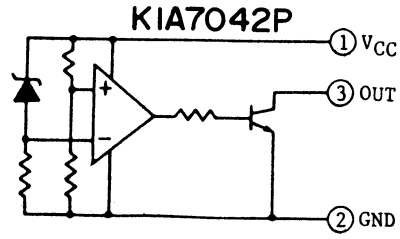

MC7915

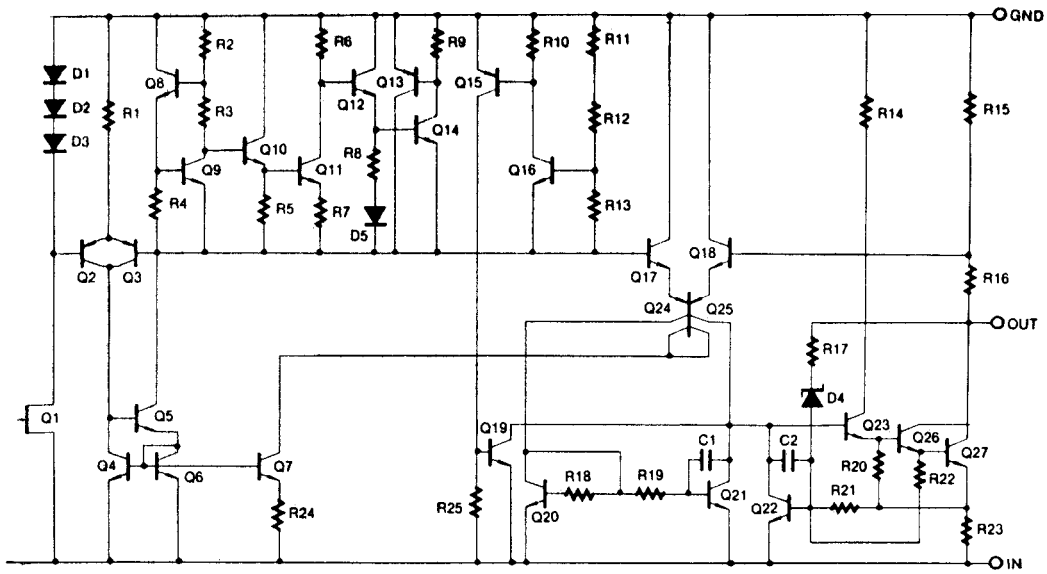

MC7805/MC7815

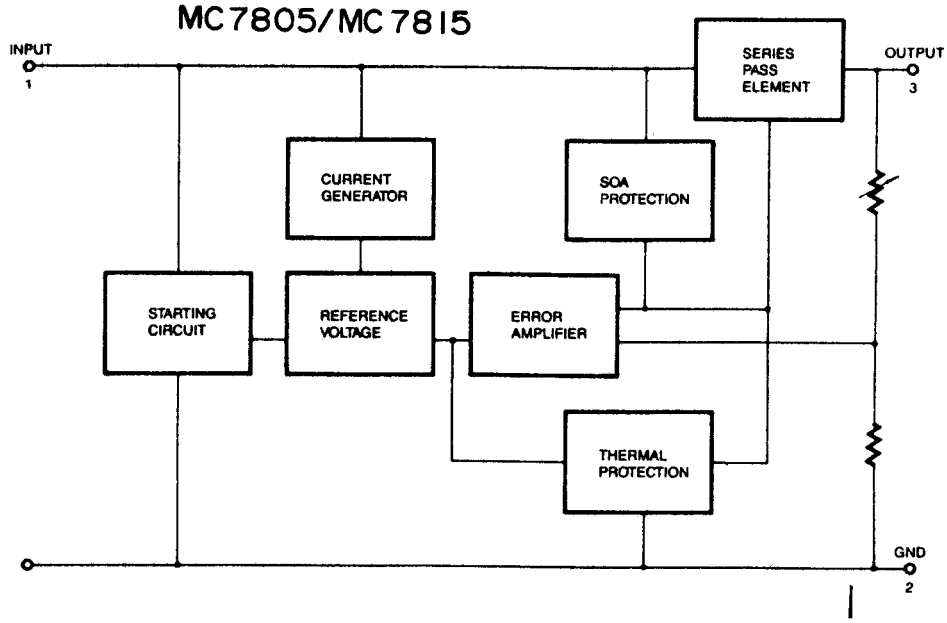

TDA7300

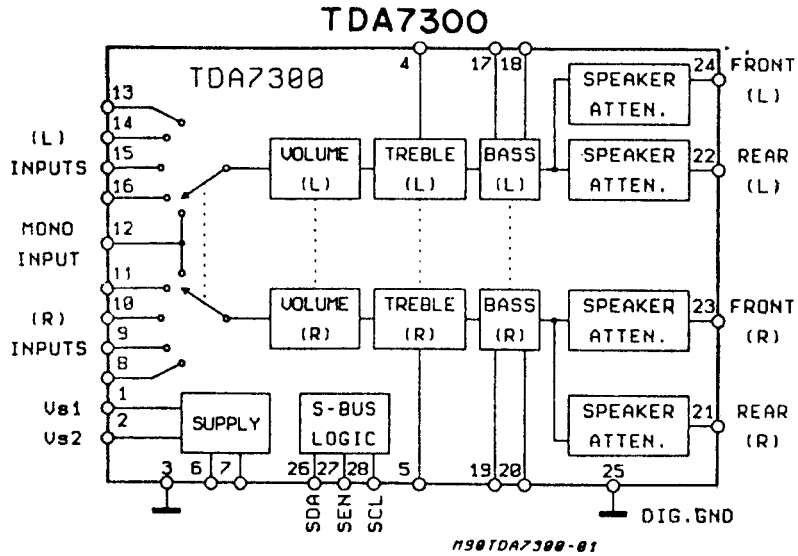

STK4192 II

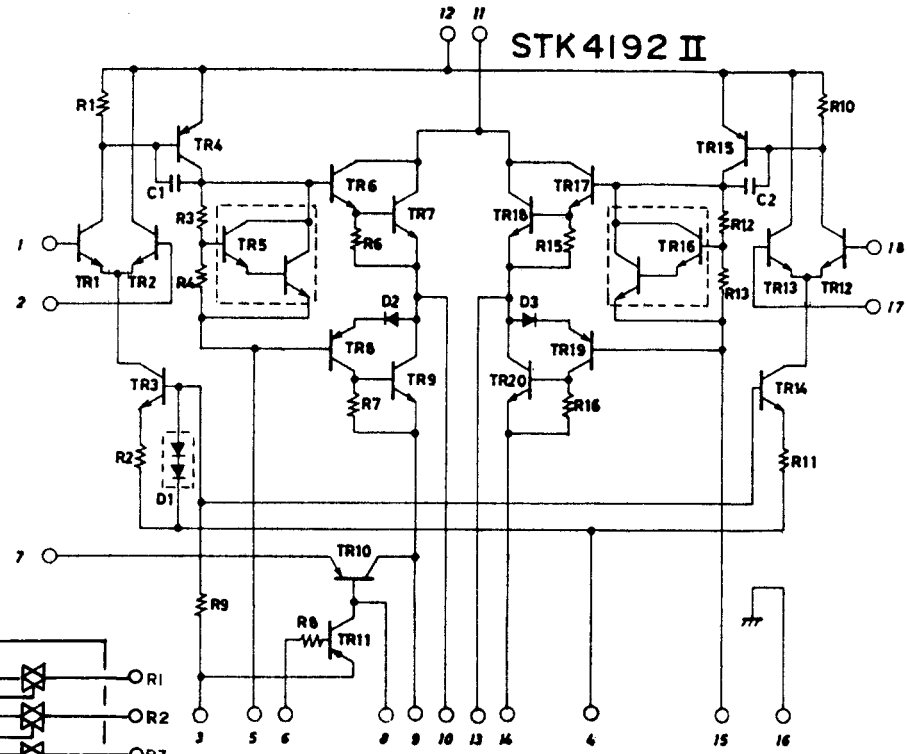

LC7821

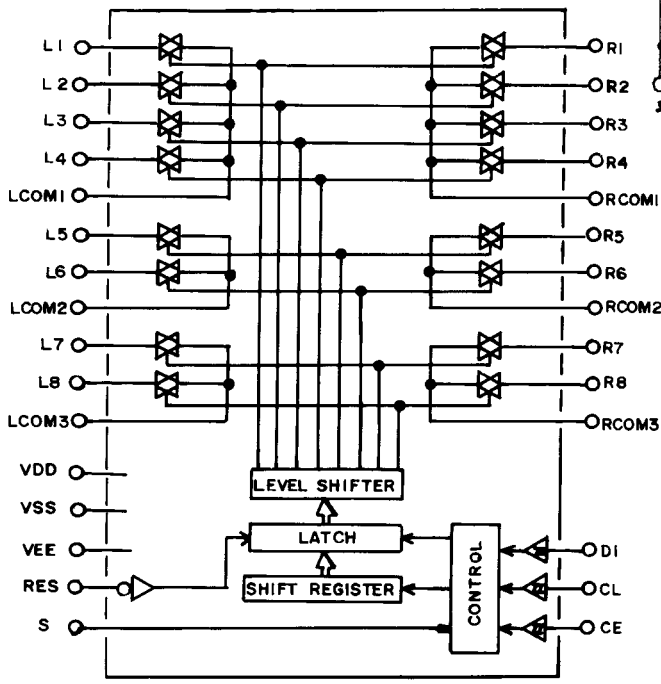

UPD6122G—002

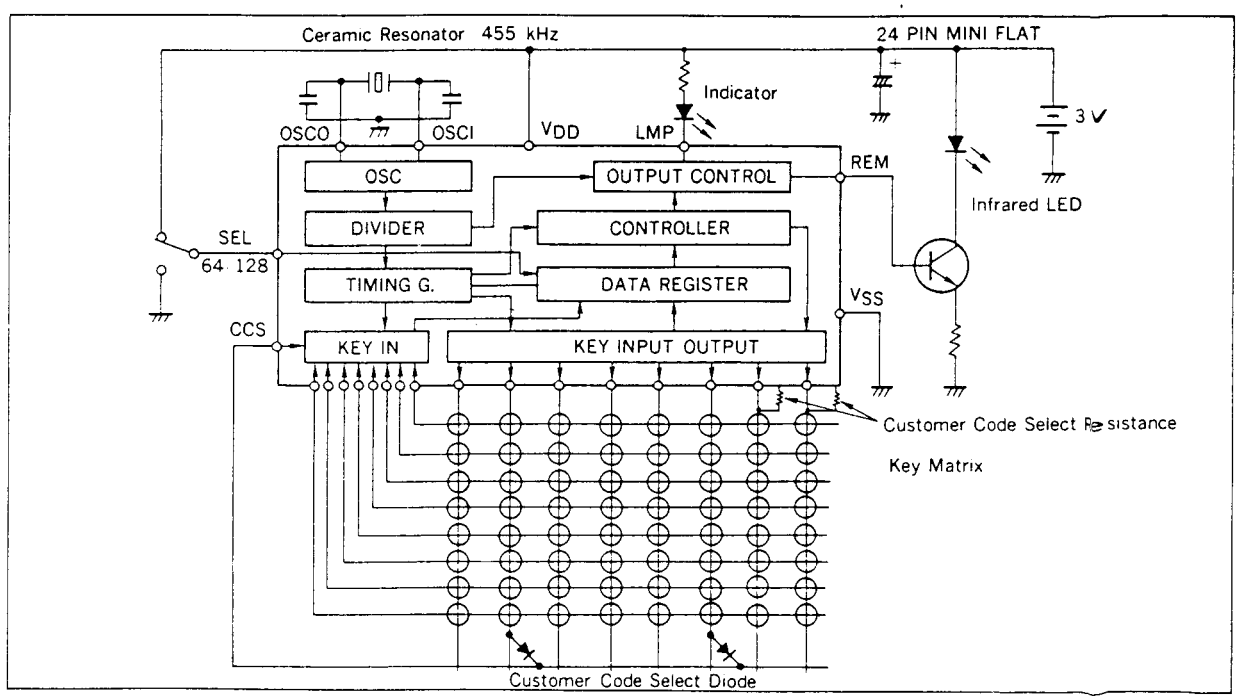

IC VOLTAGE CHECK LIST (RV-330R6)

IC101 (MC4558C)

PIN	1	2	3	4	5	6	7	8
VOL	0.9	6.6	6.6	-12.6	6.6	6.6	0.98	12.4

IC201 (LC7821)

PIN	1	2	3	4	5	6	7	8	9	10	11	12	13	14	15	16	17	18	19	20
VOL	0	0	0	0.1	0	0	0	0	0	0	0	-15	0	5	0	0	0	14.6	14.7	0
PIN	21	22	23	24	25	26	27	28	29	30										
VOL	0	0	0	0.1	0.5	0	0.5	0.2	0	0										

IC301 (MC4558C)

PIN	1	2	3	4	5	6	7	8
VOL	0	0	0	-13.6	0	0	0	13.6

IC302 (MC4558C)

PIN	1	2	3	4	5	6	7	8
VOL	0	0	0	-12	0	0	0	12

IC401 (BA6208)

PIN	1	2	3	4	5	6	7	8	9
VOL	0	0	0	0	0	11.7	0	0	0.5

IC502 (TDA7300)

PIN	1	2	3	4	5	6	7	8	9	10	11	12	13	14	15	16	17	18	19	20
VOL	11.6	8.7	0	4.3	4.3	4.3	4.3	4.3	4.3	4.3	4.3	4.3	4.3	4.3	4.3	4.3	4.3	4.3	4.3	4.3
PIN	21	22	23	24	25	26	27	28												
VOL	0	0	3.7	3.7	0	5	5	5												

IC503 (MC4558C)

PIN	1	2	3	4	5	6	7	8
VOL	0.03	0	0	-15	0	0	0.03	15

IC601 (NASU7110)

PIN	1	2	3	4	5	6	7	8	9	10	11	12	13	14	15	16	17	18	19	20
VOL	2.5	2.5	2.5	2.5	2.5	2.5	5	5	3.3	1.7	0	0	0	0	0	4.1	0	5	0	1.2
PIN	21	22	23	24	25	26	27	28	29	30	31	32	33	34	35	36	37	38	39	40
VOL	1.2	1.2	1.2	0	5	5	0	0	0	0	5	0	0	0	0	0	0	0	0	5
PIN	41	42	43	44	45	46	47	48	49	50	51	52	53	54	55	56	57	58	59	60
VOL	0	5	0	5	0	5	0	0	0	2.5	2.5	2.5	2.5	2.5	2.5	2.5	2.5	2.5	2.5	2.5
PIN	61	62	63	64	65	66	67	68	69	70	71	72	73	74	75	76	77	78	79	80
VOL	2.5	2.5	2.5	2.5	2.5	2.5	2.5	2.5	2.5	2.5	2.5	2.5	2.5	2.5	2.5	2.5	2.5	2.5	2.5	2.5

IC602 (KIA7042P)

PIN	1	2	3
VOL	5	0	5

IC701 (STK4192-2)

PIN	1	2	3	4	5	6	7	8	9	10	11	12	13	14	15	16	17	18
VOL	-0.1	-0.1	0	-44.6	-1.3	0	-46.7	-47.3	-47.6	0	47.5	45.9	0	-47.5	-1.3	0	-0.2	-0.2

IC702 (MC7815)

PIN	1	2	3
VOL	28	0	15

IC703 (MC7915)

PIN	1	2	3
VOL	0	-25.7	-15

IC704 (MC7805P)

PIN	1	2	3
VOL	20	0	5

AMPLIFIER RV-340R6

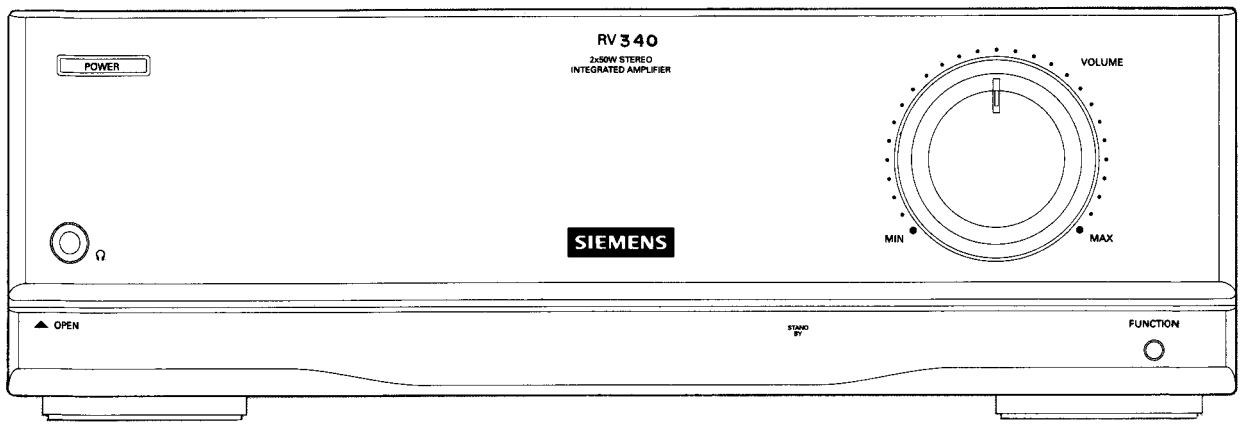

GENERAL TECHNICAL DATA

A M P L I F I E R

Power supply unit

Power supply : 230V / 50Hz
Power consumption : 530Wh
Fuse : 2.5A / 250V
6.3A / 250V X 2

Amplifier

Frequency Response (-3dB)	:	30Hz - 30K
Distortion at 50W	:	0.08%
S/N	:	Phono 60dB
		Aux 80dB
		CD 80dB

BLOCK DIAGRAM (RV340R6)

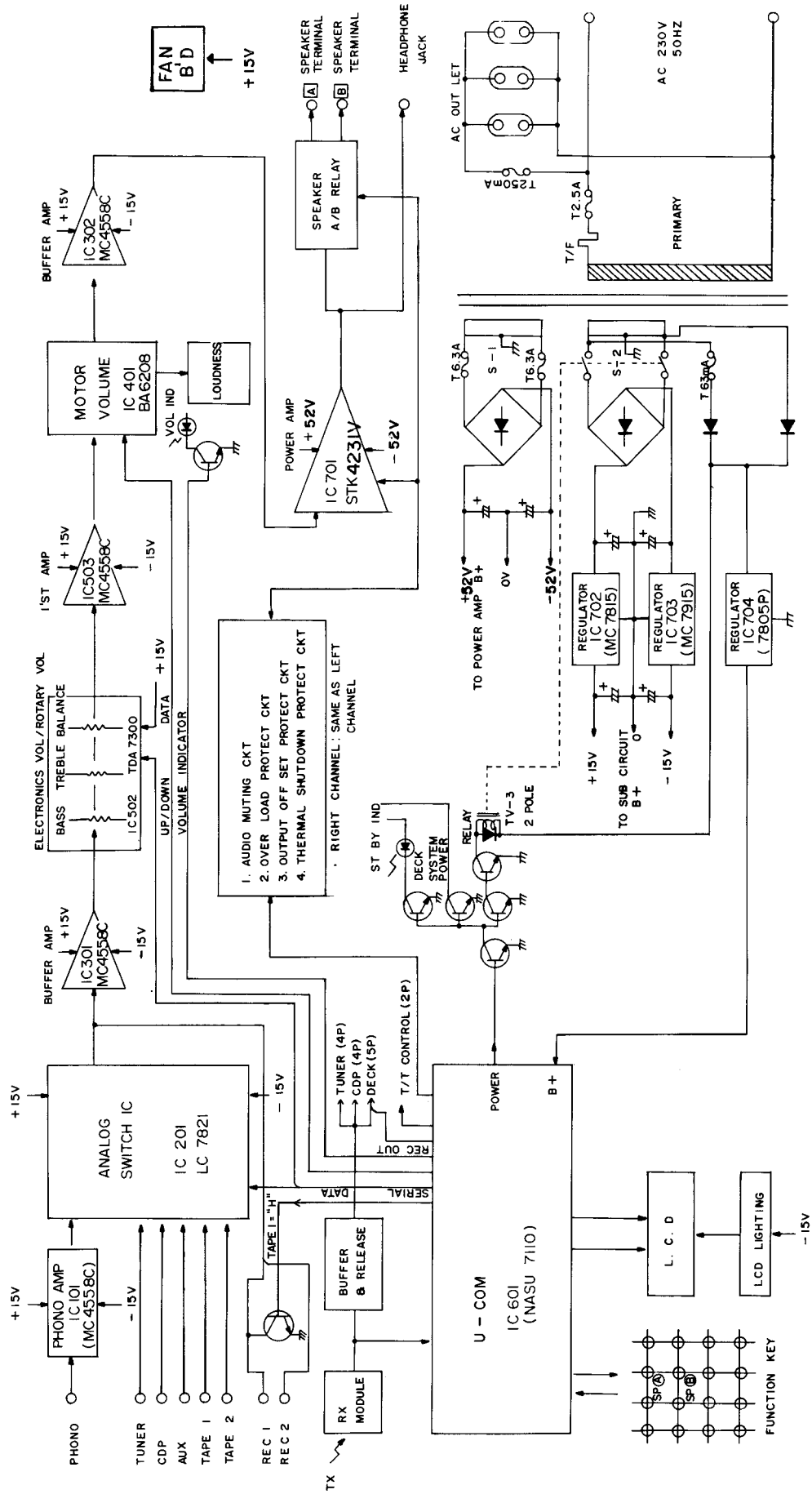

SCHEMATIC DIAGRAM(RV340R6)

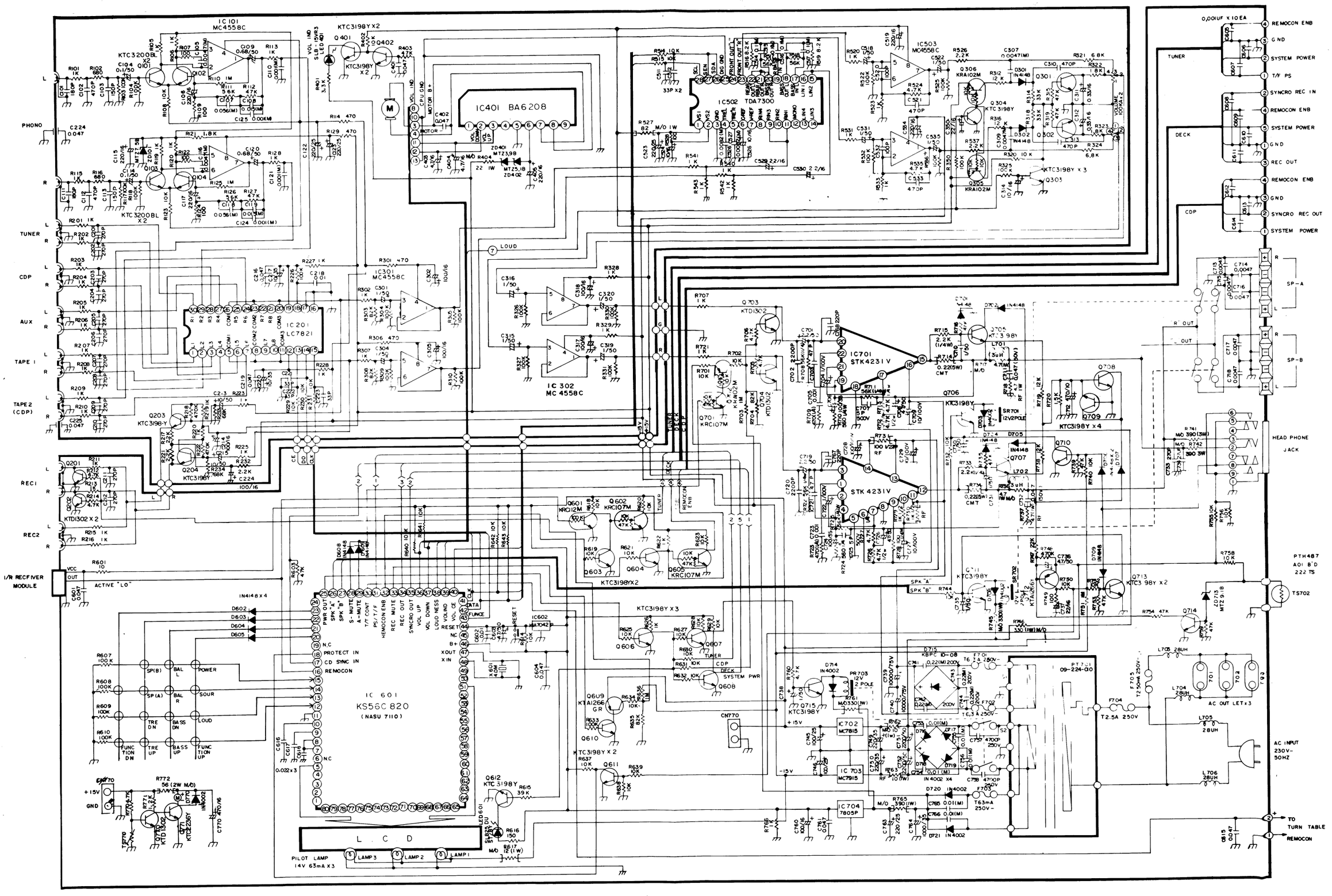

P.C.B. LAYOUT (RV340R6)

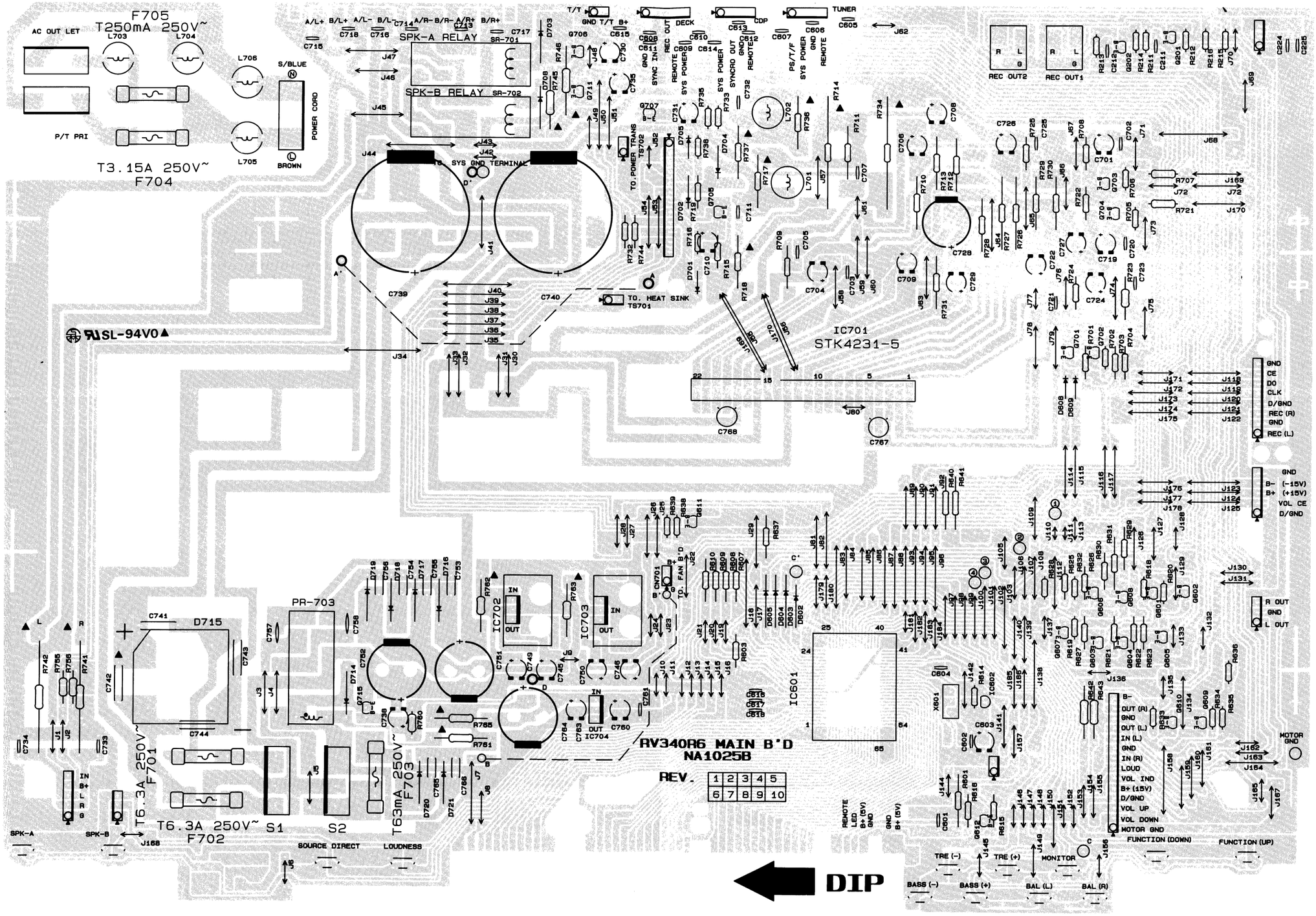

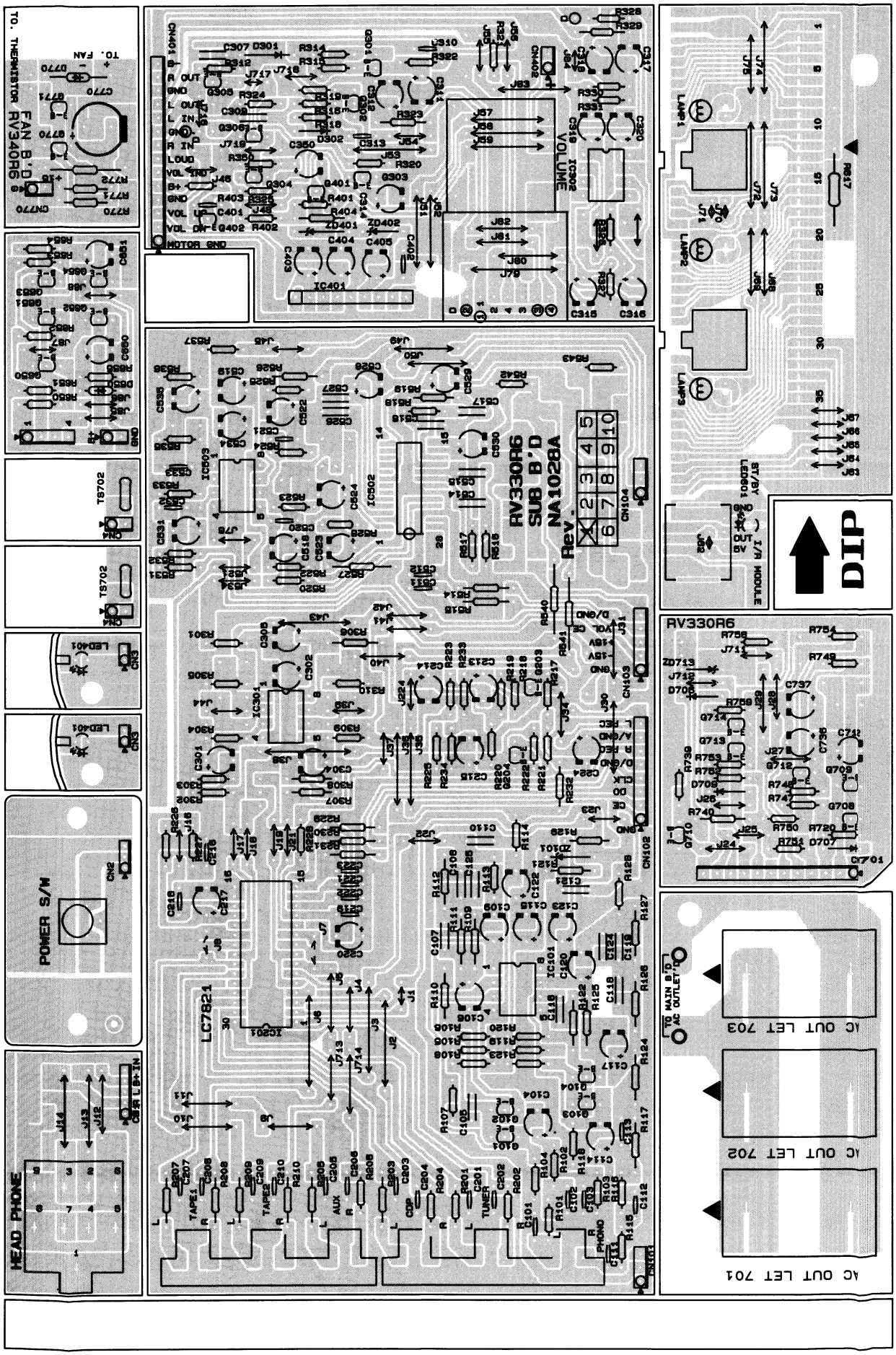
TO. THERMISTOR
FAN B'D
RV340R6
TO. FAN
POWER S/W
HEAD PHONE
LC7821
RV330R6
SUB B'D
NA1028A
Rev.
VOLUME
MOTOR GND
DIP
RV330R6
TO MAIN B'D
AC OUTLET'D
AC OUT LET 703
AC OUT LET 702
AC OUT LET 701

EXPLODED VIEW (RV340R6)

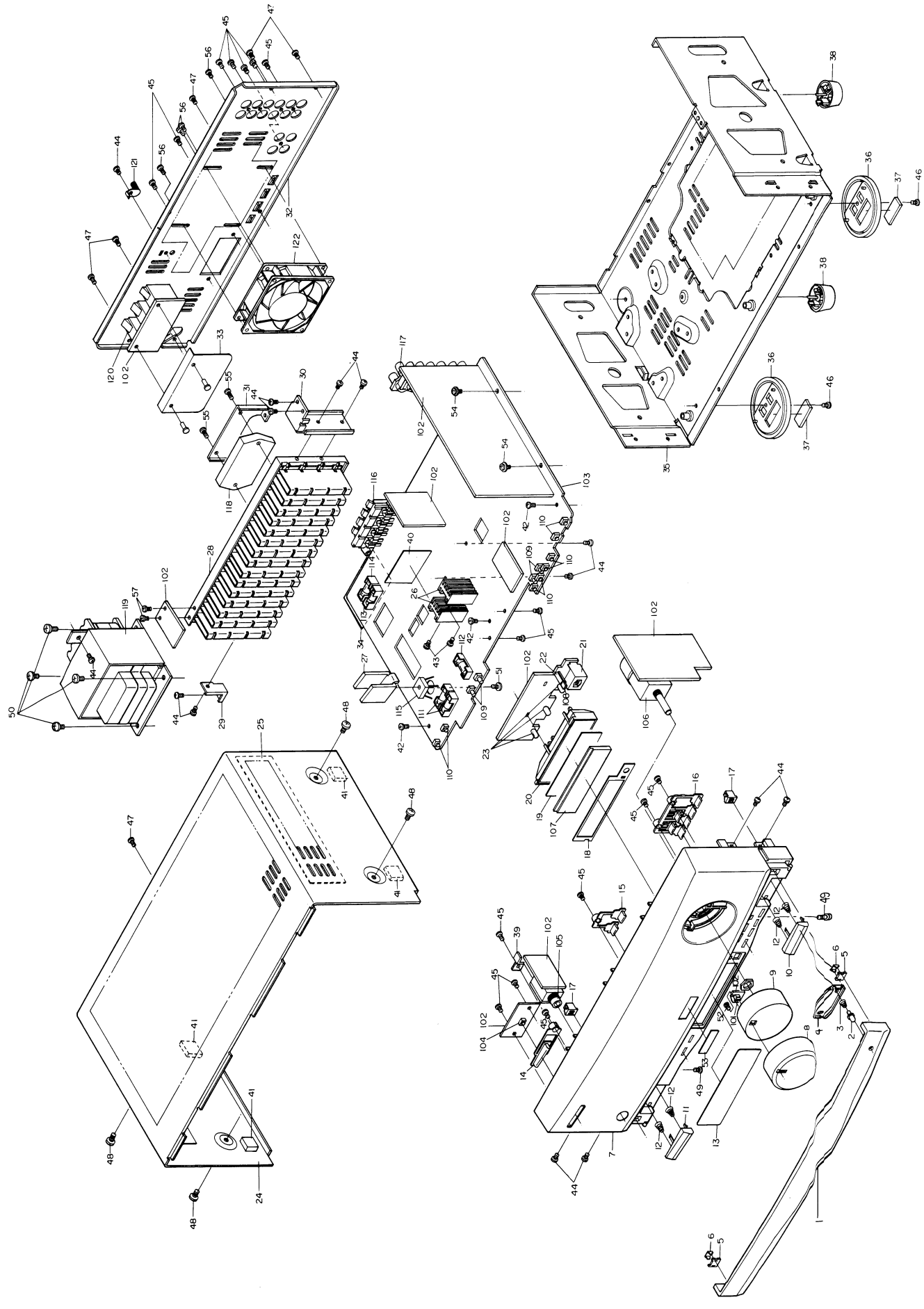

WIRING DIAGRAM(RV340R6)

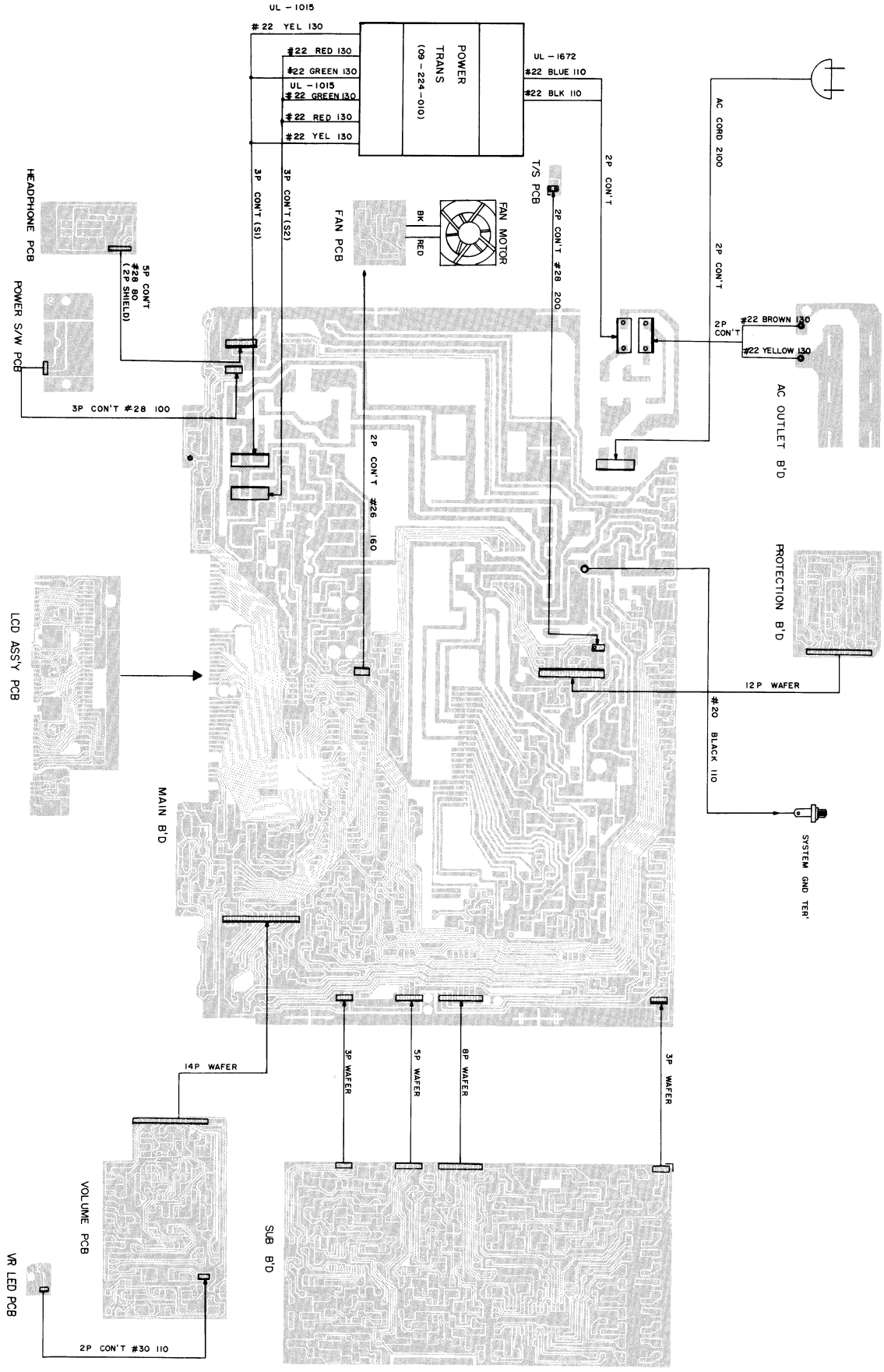

IC BLOCK DIAGRAM (RV340R6)

KS56C820

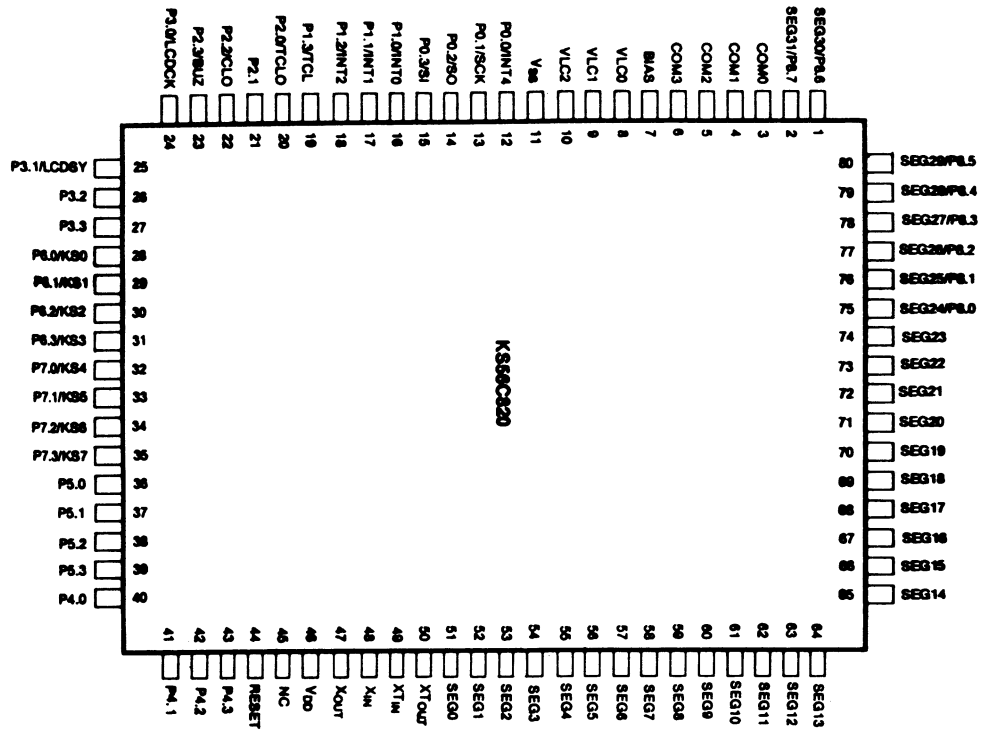

MC4558C

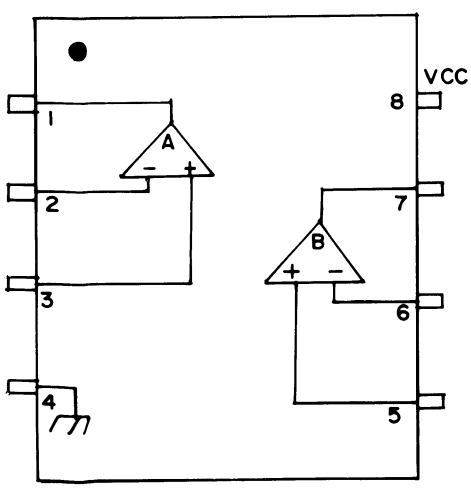

BA6208

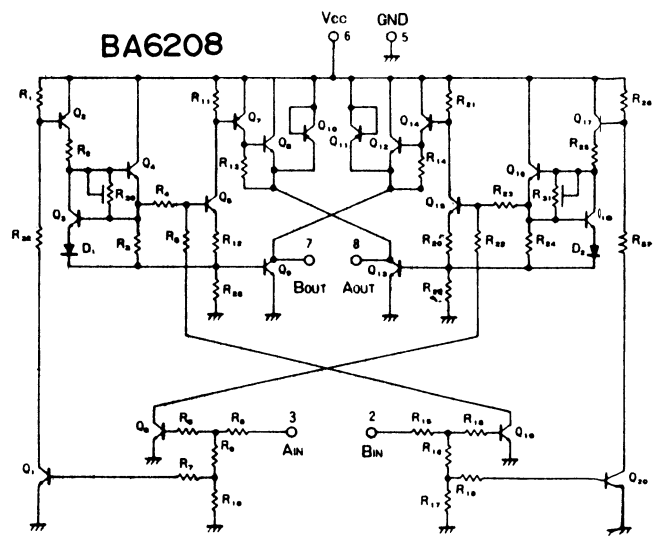

KIA7042P

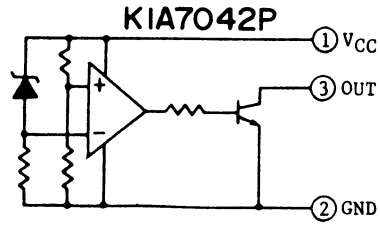

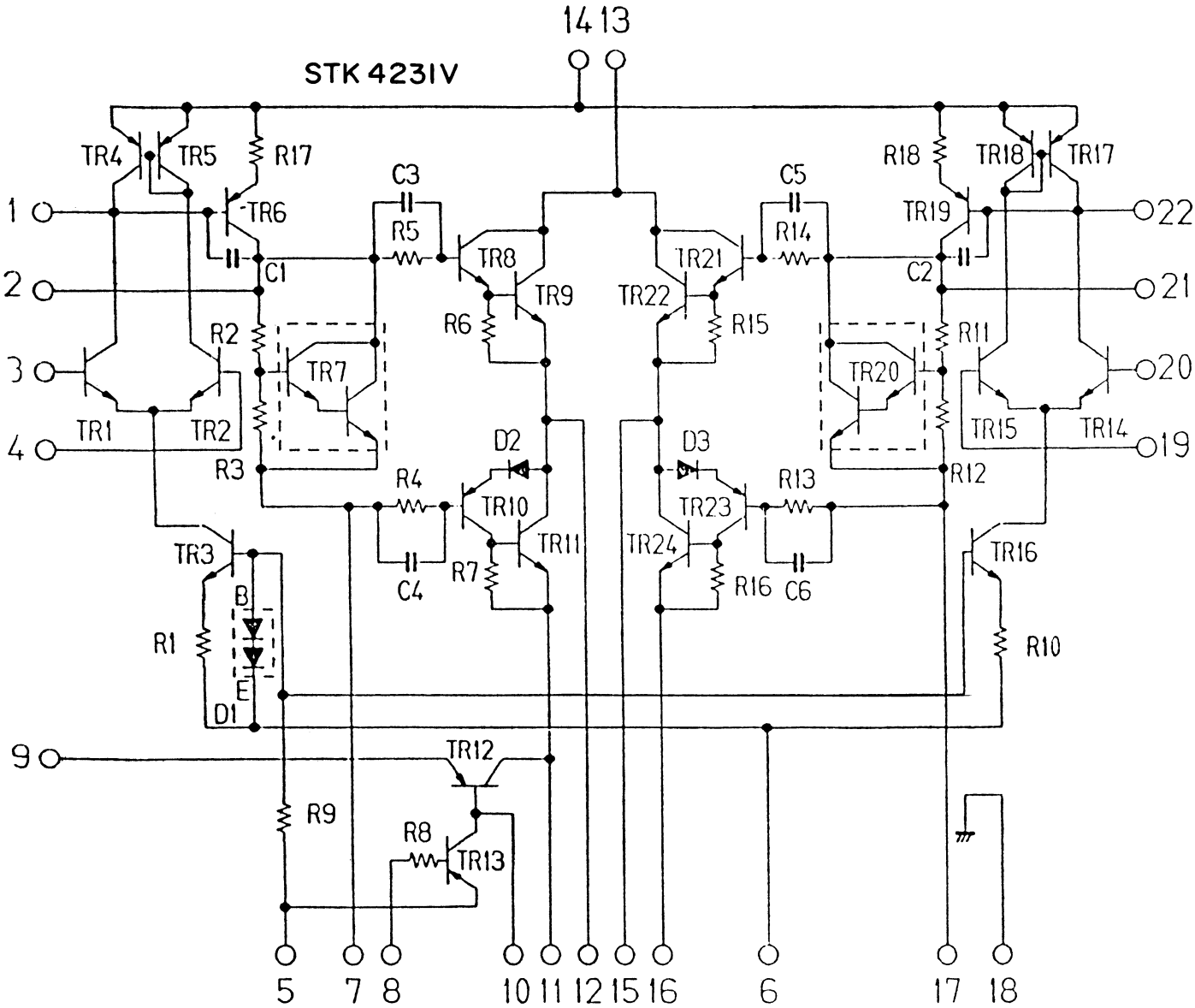
STK 4231V
14 13
1
2
3
4
22
21
20
19
9
5 7 8 10 11 12 15 16 6 17 18
TR1
TR2
TR3
TR4
TR5
TR6
TR7
TR8
TR9
TR10
TR11
TR12
TR13
TR14
TR15
TR16
TR17
TR18
TR19
TR20
TR21
TR22
TR23
TR24
R1
R2
R3
R4
R5
R6
R7
R8
R9
R10
R11
R12
R13
R14
R15
R16
R17
R18
C1
C2
C3
C4
C5
C6
D1
D2
D3
B
E

MC7915

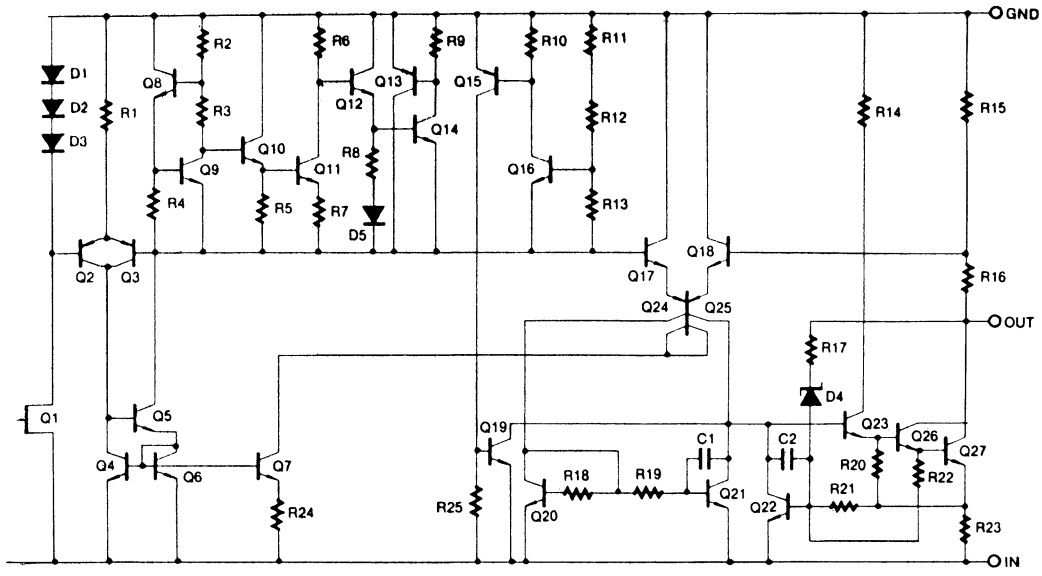

MC7805/MC7815

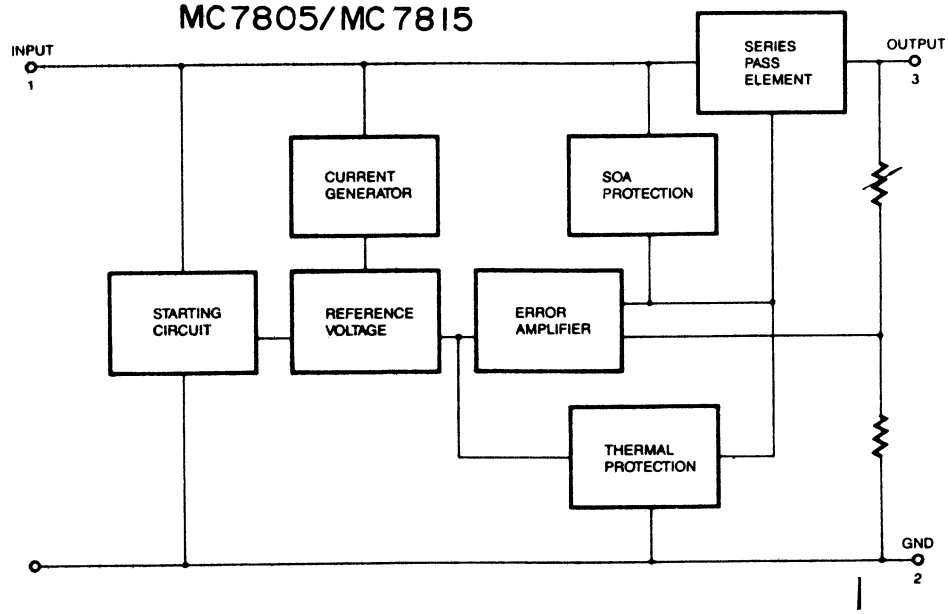

TDA7300

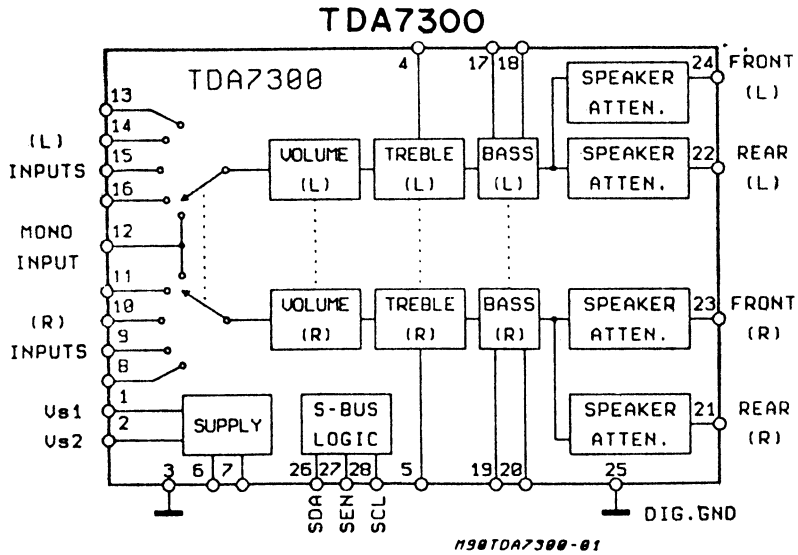

LC7821

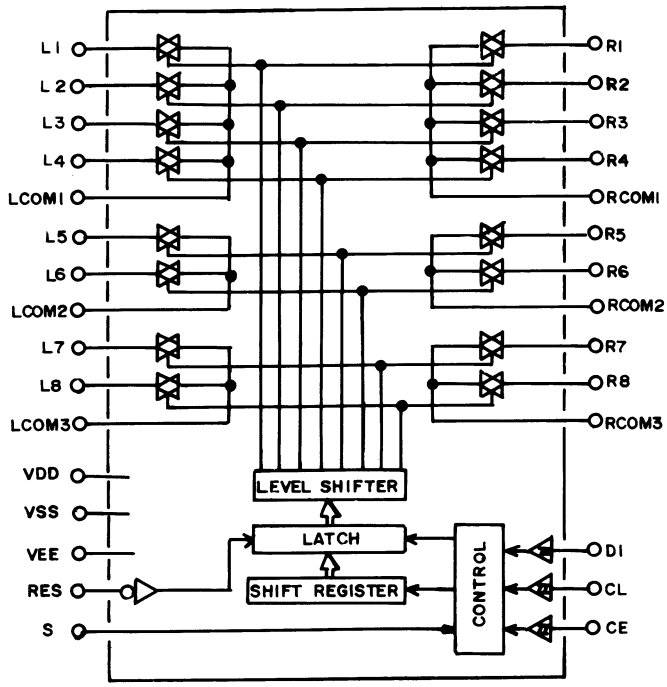

UPD6122G-002

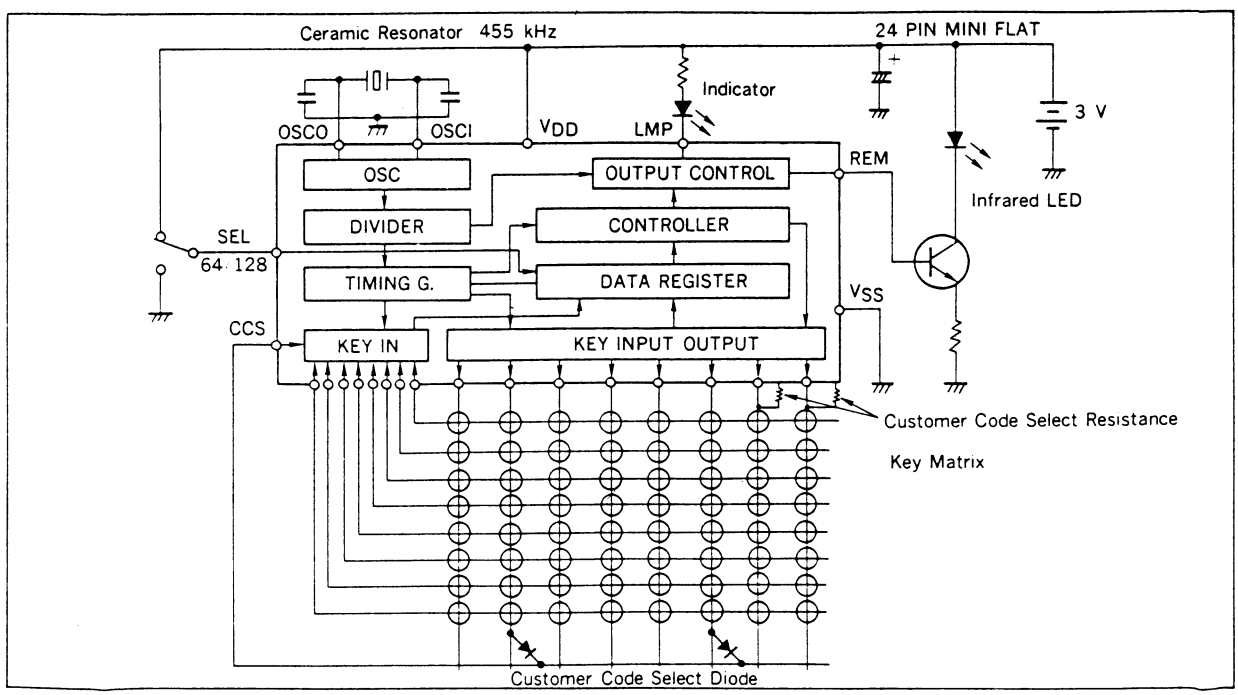

IC101 (MC4558C)

PIN	1	2	3	4	5	6	7	8
VOL	0.9	6.6	6.6	-12.6	6.6	6.6	0.98	12.4

IC201 (LC7821)

PIN	1	2	3	4	5	6	7	8	9	10	11	12	13	14	15	16	17	18	19	20
VOL	0	0	0	0.1	0	0	0	0	0	0	0	-15	0	5	0	0	0	14.6	14.7	0
PIN	21	22	23	24	25	26	27	28	29	30										
VOL	0	0	0	0.1	0.5	0	0.5	0.2	0	0										

IC301 (MC4558C)

PIN	1	2	3	4	5	6	7	8
VOL	0	0	0	-13.6	0	0	0	13.6

IC302 (MC4558C)

PIN	1	2	3	4	5	6	7	8
VOL	0	0	0	-12	0	0	0	12

IC401 (BA6208)

PIN	1	2	3	4	5	6	7	8	9
VOL	0	0	0	0	0	11.7	0	0	0.5

IC502 (TDA7300)

PIN	1	2	3	4	5	6	7	8	9	10	11	12	13	14	15	16	17	18	19	20
VOL	11.6	8.7	0	4.3	4.3	4.3	4.3	4.3	4.3	4.3	4.3	4.3	4.3	4.3	4.3	4.3	4.3	4.3	4.3	4.3
PIN	21	22	23	24	25	26	27	28												
VOL	0	0	3.7	3.7	0	5	5	5												

IC503 (MC4558C)

PIN	1	2	3	4	5	6	7	8
VOL	0.03	0	0	-15	0	0	0.03	15

IC601 (NASU7110)

PIN	1	2	3	4	5	6	7	8	9	10	11	12	13	14	15	16	17	18	19	20
VOL	2.5	2.5	2.5	2.5	2.5	2.5	5	5	3.3	1.7	0	0	0	0	0	4.1	0	5	0	1.2
PIN	21	22	23	24	25	26	27	28	29	30	31	32	33	34	35	36	37	38	39	40
VOL	1.2	1.2	1.2	0	5	5	0	0	0	0	5	0	0	0	0	0	0	0	0	5
PIN	41	42	43	44	45	46	47	48	49	50	51	52	53	54	55	56	57	58	59	60
VOL	0	5	0	5	0	5	0	0	0	2.5	2.5	2.5	2.5	2.5	2.5	2.5	2.5	2.5	2.5	2.5
PIN	61	62	63	64	65	66	67	68	69	70	71	72	73	74	75	76	77	78	79	80
VOL	2.5	2.5	2.5	2.5	2.5	2.5	2.5	2.5	2.5	2.5	2.5	2.5	2.5	2.5	2.5	2.5	2.5	2.5	2.5	2.5

IC602 (KIA7042P)

PIN	1	2	3
VOL	5	0	5

IC701 (STK4231-5)

PIN	1	2	3	4	5	6	7	8	9	10	11	12	13	14	15	16	17	18	19	20
VOL	61.6	1.2	0.1	0.1	0	-61	-1.3	0	-63	-63	-64	0	64	62.5	0	-64	-1.3	0	-0.1	-0.1
PIN	21	22																		
VOL	1.1	61.6																		

IC702 (MC7815)

PIN	1	2	3
VOL	28	0	15

IC703 (MC7915)

PIN	1	2	3
VOL	0	-25.7	-15

IC704 (MC7805P)

PIN	1	2	3
VOL	20	0	5

Kundendienststellen für die Consumer Electronics der Siemens-Electrogeräte GmbH

86154 Augsburg
Stuttgarter Straße 12/I
☎ 08 21/41 50 16

10587 Berlin 10 *
Salzufer 6-8
☎ 0 30/39 00 4-0

38114 Braunschweig
Varrentrappstraße 3
☎ 05 31/5 52 56

71254 Ditzingen
Zeisstraße 13
☎ 0 71 56/3 50-09

44143 Dortmund-Körne
Alte Straße 41
☎ 02 31/59 00 47

40227 Düsseldorf
Oberbilker Allee 270a
☎ 02 11/77 60 21

91052 Erlangen
Sieboldstraße 4
☎ 0 91 31/72 96 26

45356 Essen
Welkerhude 33-35
☎ 02 01/36 14-09

60488 Frankfurt/M.
Guerickestraße 6
☎ 0 69/76 06-09

22297 Hamburg
Mexikoring 27-29
☎ 0 40/6 38 06-09

30519 Hannover
Dorfstraße 17-19
☎ 05 11/87 05-09

76185 Karlsruhe
Bannwaldallee 46
☎ 07 21/86 30 53

87439 Kempten
Lindauer Straße 112
☎ 08 31/82 51

50823 Köln (Ehrenfeld)
Vogelsanger-Straße 165
☎ 02 21/57 15-09

68309 Mannheim
Auf dem Sand 79-81
☎ 06 21/70 04-09

80807 München
Domagkstraße 10
☎ 0 89/38 62-09

90431 Nürnberg
Witschelstraße 104
☎ 09 11/31 20-09

83022 Rosenheim
Chiemseestraße 31
☎ 0 80 31/3 10 72

89079 Ulm (Donautal)
Nicolaus-Otto-Straße 2-4
☎ 07 31/9 45 03 23

* Zentrale Kamera-Werkstatt

Zentral-Ersatzteillager

90713 Fürth 2
Postfach 2318
☎ 09 11/30 02-0